S1400

| Position | Part no | Description |
|---|---|---|
| 1 | 200600127 | CLEANING UNIT, COMPLETE (PVL) |
| 2 | 1333017 | PA6 HOSE (DIA 4/6) |
| 3 | 200600827 | COVER ASSEMBLY GRAY |
| 4 | 200800148 | HANDLE, COMPLETE (ex. S1400) |
| 5 | 200800143 | FILTER, S1400, COMPLETE |
| 6 | 200700080 | CYCLONE ASSEMBLY GRAY |
| 7 | 200600799 | CLAMP KIT |
| 8 | 200700045 | LOCKING DEVICE |
| 9 | 200700372 | TOGGLE FASTENER 118 G-3 KIT |
| 10 | 200800144 | RUBBER HOLDER, LONGOPAC (ex. S1400) |
| 11 | 10451 | SEALING |
| 12 | 200700108 | SEAL |
| 13 | 1376013 | LP28 PLASTIC TUBE-LONGOPAC |
| 14 | 200800145 | LONGOPAC-HOLDER (ex. S1400) |
| 15 | 200800146 | GAS SPRING, COMPLETE (ex. S1400) |
| 16 | 200800147 | SKID PROTECTION, KIT (ex. S1400) |
| 17 | 200800155 | HINGE, KIT (ex. S1400) |
| 18 | 200600887 | UPPER TANK HOLD GRAY |
| 19 | 200800149 | SEALING AND SCREW KIT (ex. S1400) |
| 20 | 200600560 | TANK |
| 21 | 200700438 | AL PROFILE GRAY |
| 22 | 200700076 | WAGON ASSEMBLY BONA 120 V |
| 23 | 200700048 | ENGINE SHEET |
| 24 | 200800150 | VACUUM HOSE, KIT (ex. S1400) |
| 25 | 200800151 | REAR WHEEL, KIT (ex. S1400) |
| 26 | 200800152 | FRONT WHEEL, KIT (ex. S1400) |
| 27 | 200800153 | STRIPE HOLDER, COMPLETE (ex. S1400) |
| 28 | 200800154 | HOSE UNIT (ex. S1400) |
| 29 | 200700289 | KNURLED THUMB NUT M8 DIN 466 FZB |
| 30 | 200700147a | COVER |
| 31 | 200700070 | HEPA-FILTER, S-LINE |
| 32 | 200600084d | ENGINE TUBE 110V angle |
| 33 | 200700168 | ENGINE 1800W 110V SBDS18431SA |
| 34 | 200700064 | ENGINE COVER ASSEMBLY BONA 110 V |
| 35 | 1349116 | 1417 MANOMETER (-25-0 kPa) |
| 36 | 10423 | SWITCH |
| 37 | 200700331 | HOUR METER |
| 38 | 200800021 | CABLE KIT USA |
| 39 | 200700167 | INLET TURNLOCK 4716-SS |
| 40 | 200700187 | CLEANING KIT S1400 BONA US |
| 41 | 200800010 | SUCTION HOSE S1400, 10 m |
| 42 | 6326021 | ZZ004 FLOOR TOOL (DIA 38X300) |
| 43 | 200800157 | WAGON WITH WHEELS (ex. S1400) |

51400

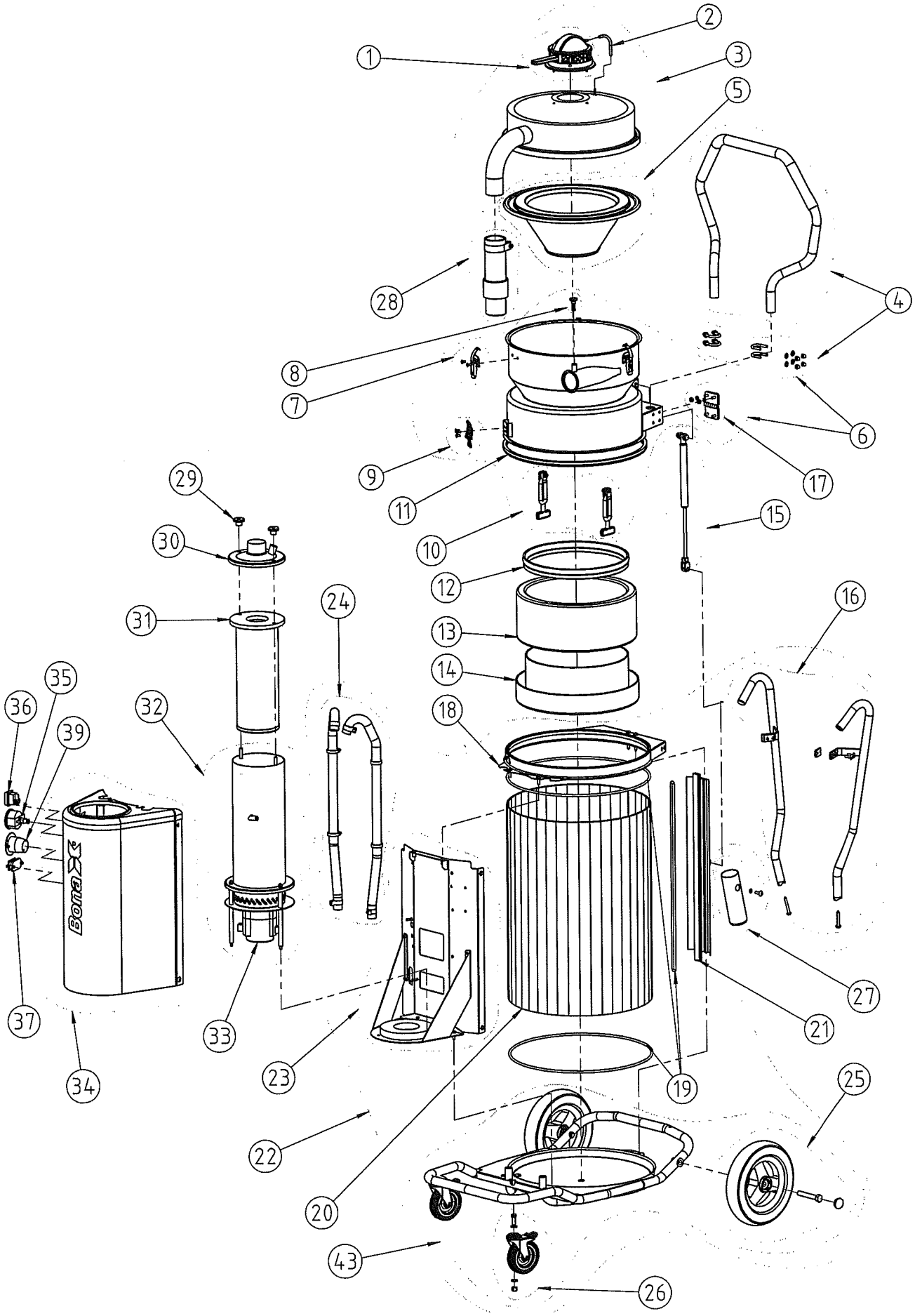
1
2
3
5
28
4
8
7
6
9
17
11
29
15
10
30
12
24
16
31
13
14
35
36
32
18
39
27
21
37
33
23
19
34
25
22
20
43
26