# WEV 15-125 Quick HT

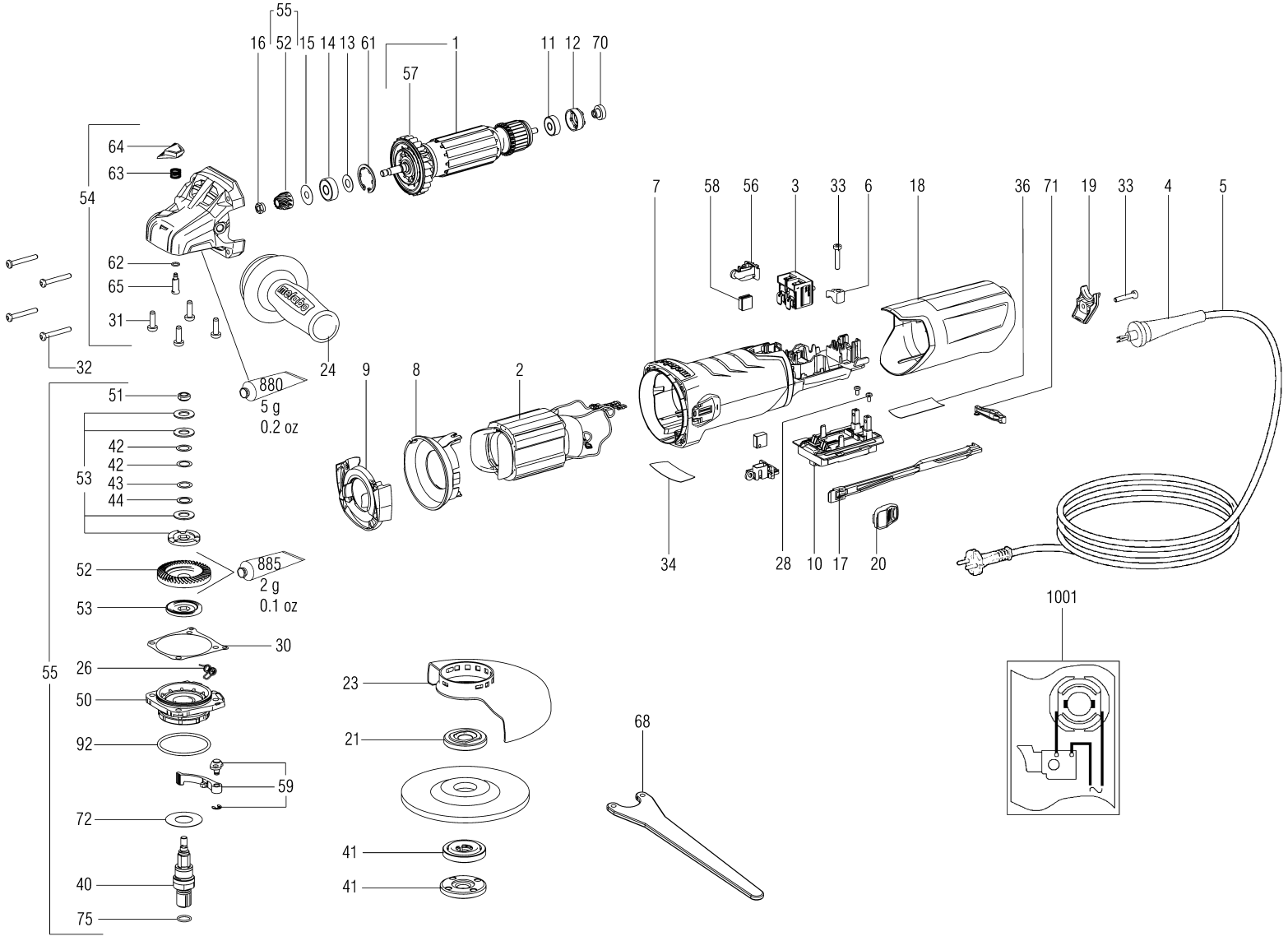

metabo®

# WEV 15-125 Quick HT

| Position | Amount | Type number | Description | PG |
|---|---|---|---|---|
| 1 | 1 | 310010990 | Armature compl., 230V | 36 |
| 2 | 1 | 311012180 | Field coil w.field coil,230 V | 33 |
| 3 | 1 | 343410290 | Switch 2-pole | 21 |
| 4 | 1 | 344101220 | Cable sleeve | 12 |
| 5 | 1 | 344490850 | Cable with plug | 27 |
| 6 | 1 | 343362490 | Cable clip | 12 |
| 7 | 1 | 315013520 | Motor housing 2 part | 21 |
| 8 | 1 | 339151180 | Baffle | 11 |
| 9 | 1 | 339151200 | Baffle | 11 |
| 10 | 1 | 343082890 | Electronic unit,230V 50/60Hz | 32 |
| 11 | 1 | 143115170 | Ball bearing,6x19x6 | 16 |
| 12 | 1 | 344097870 | Rubber bushing | 11 |
| 13 | 1 | 339133060 | Washer,8,05x17x0,4 | 11 |
| 14 | 1 | 143115180 | Ball bearing,8x22x7 | 17 |
| 15 | 1 | 339006390 | Washer,7,05x19,5x0,2 | 11 |
| 16 | 1 | 341100940 | Hexagon nut w.recess | 12 |
| 17 | 1 | 343433070 | Switch rod | 11 |
| 18 | 1 | 343433030 | Cap | 15 |
| 19 | 1 | 343433100 | End cap | 11 |
| 20 | 1 | 343437100 | Switch slide | 11 |
| 21 | 1 | 341031160 | Clamping flange | 22 |
| 23 | 1 | 339204500 | Wheel guard,D125 | 20 |
| 24 | 1 | 314000970 | Anti-vibration handle,M 8 | 24 |
| 26 | 1 | 342022040 | Spring clip | 11 |
| 28 | 2 | 141121430 | Fill. head screw(DIN 7985) | 11 |
| 30 | 1 | 339011970 | Gasket | 11 |
| 31 | 4 | 141121640 | Fill. head screw(DIN 7985) | 11 |
| 32 | 4 | 141116980 | Self-tap. fill. h. screw | 11 |
| 33 | 2 | 141117060 | Self-tap. fill. h. screw | 12 |
| 34 | 1 | 338060510 | Rating plate | 11 |
| 36 | 1 | 399999990 | Part not needed | |
| 40 | 1 | 341604420 | Spindle M14 | 23 |
| 41 | 1 | 316055350 | Clamping nut compl.,M14 | 22 |
| 42 | 2 | 141151120 | Washer 10,2 X 14,8X 0,2 | 11 |
| 43 | 1 | 141152300 | Washer 10,2 X 14,8X 0,1 | 12 |
| 44 | 1 | 141153920 | Washer 10,2 X 14,8X 0,5 | 11 |
| 50 | 1 | 343433280 | Flange compl. | 20 |
| 51 | 1 | 341102460 | Nut | 13 |
| 52 | 1 | 316055690 | Bevel gear w.pinion | 29 |
| 53 | 1 | 316055080 | Friction washer set compl. | 23 |
| 54 | 1 | 316055100 | Gear housing compl. | 33 |

# WEV 15-125 Quick HT

| Position | Amount | Type number | Description | PG |
|---|---|---|---|---|
| 55 | 1 | 316055000 | Safety clutch w.pinion | 40 |
| 56 | 1 | 316057050 | Brush holder | 22 |
| 57 | 1 | 316054850 | Fan w. dust guard | 15 |
| 58 | 1 | 316055770 | Carbon brush set cut-off | 20 |
| 59 | 1 | 316055110 | Clamping lever compl. | 20 |
| 61 | 1 | 141156650 | Retaining ring | 11 |
| 62 | 1 | 143193650 | O-ring | 11 |
| 63 | 1 | 342003390 | Pressure spring | 11 |
| 64 | 1 | 343433130 | Push button | 11 |
| 65 | 1 | 341515640 | Bolt | 11 |
| 68 | 1 | 399999990 | Part not needed | |
| 70 | 1 | 343433060 | Tacho disc | 13 |
| 71 | 1 | 343433090 | Pivoting switch | 11 |
| 72 | 1 | 339007800 | Washer | 11 |
| 75 | 1 | 143192490 | O-ring | 12 |
| 92 | 1 | 143195640 | O-ring | 11 |
| 880 | 1 | 344130920 | Grease 100G | 31 |
| 885 | 1 | 344130560 | Grease SF 011 50Gr 1,8oz | 30 |
| 1001 | 1 | 338505780 | Diagram | |

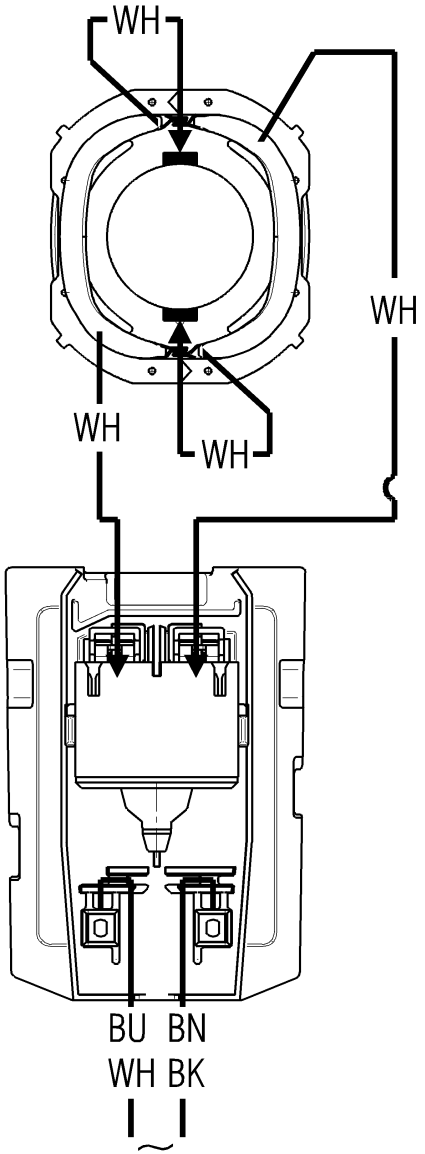
WH
WH
WH
WH
BU BN
WH BK