Therma-Stor® LLC
Driven by performance. Powered by design.™

PHOENIX™ RESTORATION EQUIPMENT

Owner's Manual — Phoenix 200HT

Installation, Operation & Service Instructions

Read and Save These Instructions

The Phoenix 200HT is one of the most effective and versatile drying devices available. The Phoenix 200HT features higher capacity and superior efficiency compared to other refrigerant dehumidifiers, removing 135 pints per day at AHAM while drawing only 7.2 amps of electricity.

The 200HT also features Phoenix's patented bypass system. At higher temperatures, where typical LGRs lose effectiveness, patented Bypass Technology helps the Phoenix 200HT continue to remove moisture, leading to faster evaporation, quicker drying, and elimination of the need to remove equipment for temperature control.

The Phoenix 200HT LGR, High Capacity Dehumidifier

- **Patented Bypass Technology**
- **High Capacity** - Removes 135 pints per day at AHAM
- **7.2 amps** - Removes over 6.5 pints/kWh.
- **R-410A Refrigerant**
- **More Grain Depression** - Drier air from an LGR finishes jobs quicker versus a conventional refrigerant dehumidifier.
- **Focused Airflow** - Patented focused outlet directs air downward across the wet surface.
- **Motorized Impeller** - 380 CFM; Faster drying and superior static pressure for ducting.
- **Multiple Ducting Options** - 12" intake, 10" exhaust.
- **Solid State Controls** - Easy to read and operate.
- **Recessed 12" Wheels** - Allows greater maneuverability on the job site and efficient storage. Rolls over obstacles with ease.
- **MERV-11 Pleated Media Air Filter**

Phoenix 200HT
4029970

TS-621
01/12

Specifications subject to change without notice.

Table of Contents

Introduction 1
1. Specifications 2
2. Operation 2
2.1 Transporting the Phoenix 200HT 2
2.2 Location 2
2.3 Electrical Requirements 3
2.4 Condensate Removal 3
2.5 Ducting 3
2.6 Power Button 3
2.7 Pump Purge Button 3
2.8 Hour Meter 3
2.9 Hours Button 3
2.10 Defrost Light 3
2.11 Low Pressure Protection 3
2.12 Defrost Cycle 3
2.13 Temperature Specific Operation 4
3. Maintenance 4
3.1 Air Filter 4
3.2 Storage 4
4. Service 4
4.1 Technical Description 4
4.2 Troubleshooting 5
4.3 Air Mover Replacement 5
4.4 Thermistor Replacement 5
4.5 Condensate Pump Replacement 6
4.6 Refrigerant Charging 6
4.7 Compressor/Capacitor Replacement 6
4.8 Gravity Drain Option 6
5. Wiring Diagram 7
6. Service Parts List 8
7. Warranty 10

Serial No. _____

Purchase Date _____/_____/_____

Dealer's Name _____

Read the operation and maintenance instructions carefully before using this unit. Proper adherence to these instructions is essential to obtain maximum benefit from your Phoenix 200HT dehumidifier.

⚠WARNING

- It is designed to be used **INDOORS ONLY**.
- If used in a wet area, plug it into a **GROUND FAULT INTERRUPTER**.

⚠WARNING

- **DO NOT** use the Phoenix 200HT as a bench or table.
- It must always be used in the upright position.

1 Specifications

Part No.	**4029970**
Power	110-120 Vac, 7.2 amps
Water Removal	135 pints/day @ AHAM (80°F, 60%)
Refrigerant Charge	2 lbs. 2 oz. R410a
Blower	380 CFM Internal Condensate Pump with 20' lift, 30' vinyl hose
Operating Range	33°F to 125°F
Filters	16" x 20" x 2" Pleated Media MERV-11
Duct Options	Intake – 12" Flex-Duct Exhaust – 10" Lay-Flat
Warranty	Five years; First year 100% of Parts and Labor Second-fifth year 100% of Parts of sealed refrigeration system.
Dimensions	Width 20", Height 40", Depth 23"
Weight	130 lbs.

2 Operation

2.1 Transporting the Phoenix 200HT

The Phoenix 200HT must always be upright when transported by vehicle. It may be tipped on to its handle and back for loading and moving by hand.

2.2 Location

Note the following precautions when locating the Phoenix 200HT:

- It is designed to be used **INDOORS ONLY.**
- If used in a wet area, plug it into a **GROUND FAULT INTERRUPTER**.
- **DO NOT** use the Phoenix 200HT as a bench or table.
- It must always be used in the upright position.
- The air inlet on top & the side outlet must be at least 1 foot from walls and other obstructions to air flow.

2.3 Electrical Requirements

The Phoenix 200HT plugs into a common grounded outlet on a 15 Amp circuit. It draws 7.2 Amps at 80°F, 60% RH. If used in a wet area, a ground fault interrupter (GFI) is required.

If an extension cord is required, it must have a minimum of 14 gauge conductors if 25 feet long or less and 12 gauge conductors if greater than 25 feet long.

2.4 Condensate Removal

The Phoenix 200HT is equipped with an internal condensate pump to remove the water that is condensed during dehumidification. This allows the condensate to be pumped 30' with the attached hose. If the condensate must be pumped more than 20 feet above the unit, a second pump must be added to relay the condensate. If the pump fails and the unit must be used before it can be replaced, the condensate can be drained by gravity (see Sec. 4.9).

2.5 Ducting

A detachable rectangular exhaust collar is supplied that will allow 10" round lay-flat duct to be attached to the Phoenix 200HT outlet.

To attach ducting to a collar, put the plastic duct end through the collar center and roll the duct end outward so that it overlaps the outside of the collar. The duct and collar may then be quickly attached to the Phoenix 200HT by snapping the collar over the four screws at the blower outlet.

2.6 Power Button

Press the POWER button to turn the dehumidifier on or off. When starting the dehumidifier the display will show the accumulated hours. Press the POWER button again to turn the dehumidifier off. The display will also power off.

2.7 Pump Purge Button

During normal operation the pump automatically cycles every four minutes. Press the PURGE button to remove condensate manually from the reservoir. There are several ways to manually remove water from the reservoir:

1. Press the PURGE button once and the pump will run for 20 seconds
2. Press and hold the PURGE button and the pump will run for up to 30 seconds
3. Press the PURGE button while the dehumidifier is powered off and the pump will run for 30 seconds.

Always manually purge the water reservoir before transport or storage. Turn off the power and allow the plugged in dehumidifier to rest 15 minutes before the final purge.

2.8 Hour Meter

The digital hour meter displays the cumulative and job time the dehumidifier has been turned on to the tenth of an hour. The total and job hours measured are stored when the unit is unplugged. The previous total will be displayed the next time the unit is turned on. The job hours can be reset by pressing and holding the HOURS button for 5 seconds when the unit is operating.

2.9 HOURS Button

Press the HOURS button when the dehumidifier cannot be plugged in and the hour meter needs to be read. The digital hour meter will briefly display the last saved cumulative time for 10 seconds.

2.10 DEFROST Light

The DEFROST light turns on when the unit is in defrost mode indicating when the compressor is off.

DRYING TIP: Air's ability to absorb moisture from wet surroundings and the Phoenix 200HT's ability to remove moisture from that air is greatly improved at higher temperatures. We recommend that the area to be dried be heated to over 70°F if possible. Less drying time will be required and efficiency will improve.

2.11 Low Pressure Protection

If the low side pressure drops to 35 PSIG, the low pressure control opens and shuts of the compressor. It is an automatically reset control. Its primary function is to prevent damage to the compressor if a leak develops in the refrigeration system.

2.12 Defrost Cycle

If the low side refrigerant temperature drops below the defrost set point, due to excessive frost formation on the evaporator coil, the thermistor activates the solid state control and the defrost light. The control cycles the compressor "off" and "on" by monitoring thermistor temperature. The air mover will continue to run, causing air to flow through the evaporator coil. The air will melt the ice that formed on the evaprator.

When the air temperature and/or humidity increases, the evaporator temperature will rise and the thermistor will end the defrost cycle restarting the compressor.

If the evaporator temperature does not reach the desired temperature, the compressor will start after 15 minutes. The system will start a timed defrost cycle. The timed defrost cycle ensures the unit will continue to remove water from the air in cool ambient conditions.

2.13 Temperature Specific Operation

Above 90F –When the Phoenix 200 HT is used in high temperature conditions (above 90F), the refrigerant

temperature inside the condenser rises. By removing the bypass magnet from the bypass openings, additional airflow is directed over the condenser and less airflow is directed across the evaporator. The airflow differences improve the dehumidifier efficiency.

Below 90F – When the Phoenix 200 HT is used in low temperature conditions (below 90F), the refrigerant temperature inside the condenser lowers. By adding a bypass magnet to the bypass openings, additional airflow is added through the evaporator. The airflow difference improves the dehumidifier efficiency.

3 Maintenance

3.1 Air Filter

The Phoenix 200HT is equipped with a pleated fabric air filter that must be checked regularly. The standard filter is a MERV-11 high efficiency filter. Operating the unit with a dirty filter will reduce the dehumidifier's capacity and efficiency and may cause the compressor to cycle off and on unnecessarily on the defrost control.

IMPORTANT: DO NOT operate the unit without the filter or with a less effective filter as the heat exchanger and coils inside the unit could become clogged and require disassembly to clean.

3.2 Storage

There are two issues to consider when the Phoenix 200HT is stored between uses. Both pertain to the water trapped in the unit: damage caused by freezing or biological growth. The effect of the trapped water can be greatly reduced if precautions are taken to remove as much as possible before storage.

1. Use the pump purge switch (see Sec. 2.7) to reduce the water level in the reservoir.
2. Stretch the hose flat to drain it completely. Raise one end above your head and spool to drain water out of the other end.

If the unit will not be exposed to freezing temperatures, an alternative to reduce biological growth is to flush the unit with a bio-fungicide that is approved for use with copper, aluminum and polyethylene. To flush:

1. Run the hose to a drain.
2. Plug in the unit but do not turn it on.
3. Remove the air filter. Slowly pour a quart of the chemical through the heat exchanger
4. Hold in the pump purge switch to reduce the water level in the reservoir.
5. Flush with water.

4 Service

⚠CAUTION

CAUTION: Servicing the Phoenix 200HT with its high pressure refrigerant system and high voltage circuitry presents a health hazard which could result in death, serious bodily injury, and/or property damage. Only qualified service people should service this unit.

4.1 Technical Description

The Phoenix 200HT uses a refrigeration system similar to an air conditioner's to remove heat and moisture from incoming air, and to add heat to the air that is discharged (see Fig. 2).

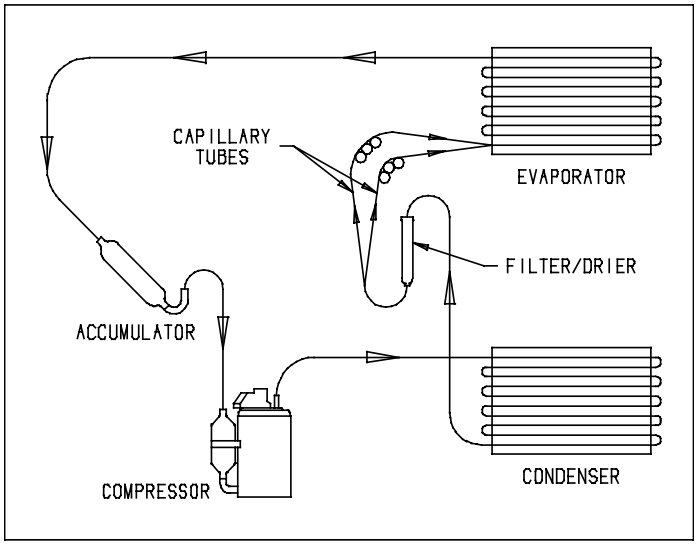

Figure 2: Refrigeration system

Hot, high pressure refrigerant gas is routed from the compressor to the condenser coil (see Figure 2). The refrigerant is cooled and condensed by giving up its heat to the air that is about to be discharged from the unit. The refrigerant liquid then passes through a filter/drier and capillary tubing which cause the refrigerant pressure and temperature to drop. It next enters the evaporator coil where it absorbs heat from the incoming air and evaporates.

The evaporator operates in a flooded condition, which means that all the evaporator tubes contain liquid refrigerant during normal operation. A flooded evaporator should maintain constant pressure and temperature across the entire coil, from inlet to outlet.

The mixture of gas and liquid refrigerant enter the accumulator after leaving the evaporator coil. The accumulator prevents any liquid refrigerant from reaching the compressor. The compressor evacuates the cool refrigerant gas from the accumulator and compresses it to a high pressure and temperature to repeat the process.

4.2 Troubleshooting

No dehumidification, neither hour meter display nor compressor run and POWER button does not turn ON.

1. Unit unplugged or no power to outlet
2. Defective control board
3. Loose connection in internal wiring

No dehumidification, neither hour meter display nor compressor run with POWER button ON.

1. Defective control board
2. Loose connection in internal wiring

Some dehumidification, air mover runs continuously but compressor only runs sporadically.

1. Unit is in defrost cycle, DEFROST light on
2. Defrost thermistor defective or loose
3. Loose connection in compressor circuit
4. Defective compressor overload
5. Defective compressor
6. Low refrigerant charge
7. Defrost thermistor detached from coil
8. Loose connection to low pressure switch.

No dehumidification, air mover runs but compressor does not.

1. Bad connection in compressor circuit
2. Safety float switch closed, check pump reservoir
3. Defective compressor capacitor
4. Defective compressor overload
5. Defective compressor
6. Defective control board
7. Low refrigerant charge
8. Loose connection to low pressure switch.

Air mover does not run. Compressor runs briefly but cycles on and off.

1. Loose connection in blower circuit
2. Obstruction prevents impeller rotation
3. Defective air mover
4. Defective control board.

Unit removes some water but not as much as expected.

1. Air temperature and/or humidity have dropped
2. Humidity meter and/or thermometer used are out of calibration
3. Unit has entered defrost cycle
4. Air filter dirty
5. Defective defrost thermistor
6. Low refrigerant charge
7. Air leak such as loose front cover
8. Defective compressor
9. Restrictive exhaust or inlet ducting
10. Defrost thermistor detached from coil

Unit runs but does not pump water.

1. Hose kinked or plugged
2. Pump motor defective
3. Pump check valve plugged
4. Bad connection in pump circuit
5. Hose disconnected internally
6. Defective control board

Unit pumps water automatically but not when PURGE button is pushed.

1. Bad connection in PURGE button circuit
2. Defective control board

Evaporator coil frosted continuously, low dehumidifying capacity.

1. Defrost thermistor loose or defective
2. Low refrigerant charge

Compressor runs with POWER button OFF.

1. Defective control board
2. Upper housing not sealed to tower

No hour meter display when the HOURS button is pressed.

1. Battery charge is low. Replace battery
2. Defective control board

4.3 Air Mover Replacement

The blower has a PSC motor and internal thermal overload protection. If defective, the complete assembly must be replaced.

1. Unplug power cord
2. Remove the front cover
3. Remove the 5 screws attaching blower inlet ring
4. Remove the 4 screws mounting impeller to underside of base plate
5. Disconnect the blower leads
6. Reassemble the new blower using the above procedure in reverse

4.4 Thermistor Replacement

The defrost thermistor is attached to the refrigerant suction line between the accumulator and the evaporator.

To replace thermistor:

1. Unplug the dehumidifier
2. Remove the front cover

3. Remove aluminum tape
4. Remove control panel
5. Remove right panel screws, viewed from front, attaching front filter bracket, and evaporator
6. Remove control board
7. Detach thermistor from control board jumper, (EVAP)
8. Reassemble thermistor and dehumidifier using the above procedure in reverse

4.5 Condensate Pump Replacement

The internal condensate pump removes water that collects in the reservoir.

To replace the condensate pump:

1. Unplug the unit
2. Remove the rear skidplate
3. Unplug the pump wires from the wire harness
4. Remove the condensate hose and the screw attaching the pump bracket to the base
5. Replace the pump, hose, wiring, bolts, and cover in the reverse order

4.6 Refrigerant Charging

If the refrigerant charge is lost due to service or a leak, a new charge must be accurately weighed in. If any of the old charge is left in the system, it must be removed before weighing in the new charge. Refer to the unit nameplate for the correct charge weight and refrigerant type.

4.7 Compressor/Capacitor Replacement

This compressor is equipped with a two terminal external overload, run capacitor, but no start capacitor.

4.8 Gravity Drain Option

If the condensate pump fails and cannot be replaced immediately, the Phoenix 200HT can be used by draining by gravity.

1. Unplug the unit and remove the front cover.
2. Push the plastic plug on the right side (see Fig. 4) out from inside the unit.
3. Locate the heavy vinyl hose that connects the drain pan to the condensate pump. Pull the end out of the pump.
4. Remove tie wrap holding drain tube to suction line.
5. Push that end of the vinyl hose through the hole in the right side.
6. Connect a garden hose and run it to a drain. Keep the hose as flat to the floor as possible to avoid air pockets that would hinder draining. Placing the unit on something above the floor will also improve draining.

5 Wiring Diagram

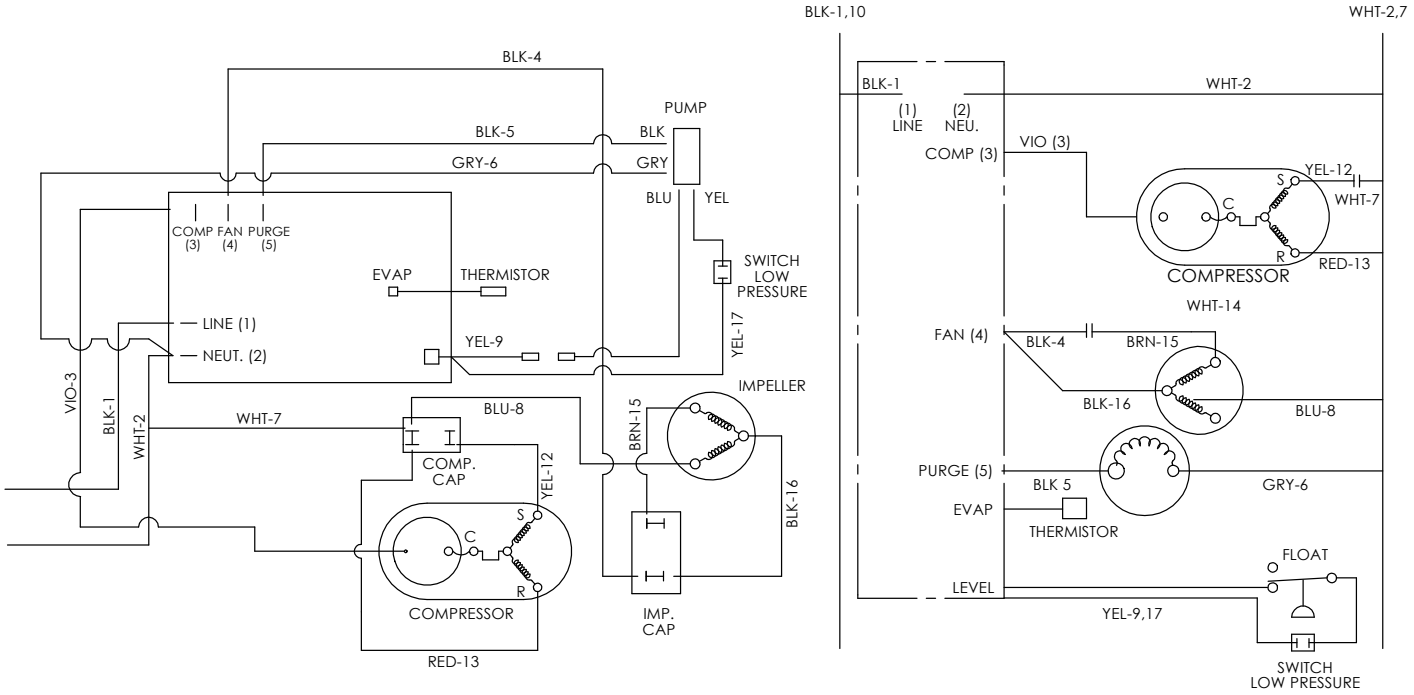

6 Service Parts

Item	Description	Qty	Part No.
1	Top Cover	1	4028583
2	Top Cover Hinge	2	4027267
3	Wheel 12” Gray	2	4026304
4	Cotter Pin 3/32”	1	1284404
5	Air Filter 1.75 x 15.5 x 19.5	1	4021475
6	Hose Plastic 0.56 ID x 24	1	4029894
7	Hose Plastic 0.38 ID	1	4021909
8	Hose Plastic 0.25ID x 33	1	4024916
9	Coupling Body 0.25 Tube	1	4024910
10	Coupling Insert 0.38 Tube	1	4023080
11	Control Board	1	4030083
12	Capacitor Compressor ***45mfd 370V***	1	4026687
13	Capacitor Impeller 15mfd 370V	1	4025224
14	Thermistor	1	4031279
15	Battery AA	1	1912500
16	Cord	1	4032297
17	TOS, 8.2 KBTU, R410A	1	4029182
18	Overload Compressor	1	4029183
19	Evaporator Coil	1	4028565
20	Condenser Coil	1	4028566
21	Condensate Pump	1	4023649
22	Fan Motorized Impeller	1	4026657
23	Inlet Ring	1	4028564
24	Wire Duct Collar	1	4028593
25	Filter Drier (not shown)	1	4029510
26	Wire Harness (not shown)	1	4030084
27	Handle	1	4026094
28	Bolt M10-1.5 X 35	2	1177792
29	Washer M10 X 30	2	4025517
30	Hex Lock Nut M10-1.5	2	1223780

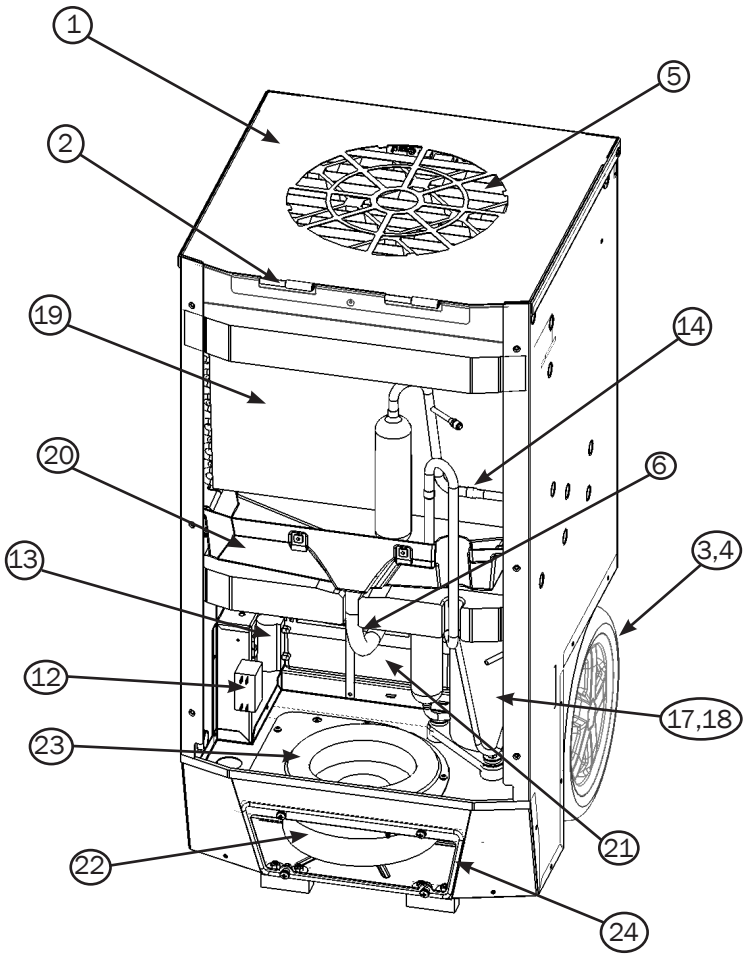

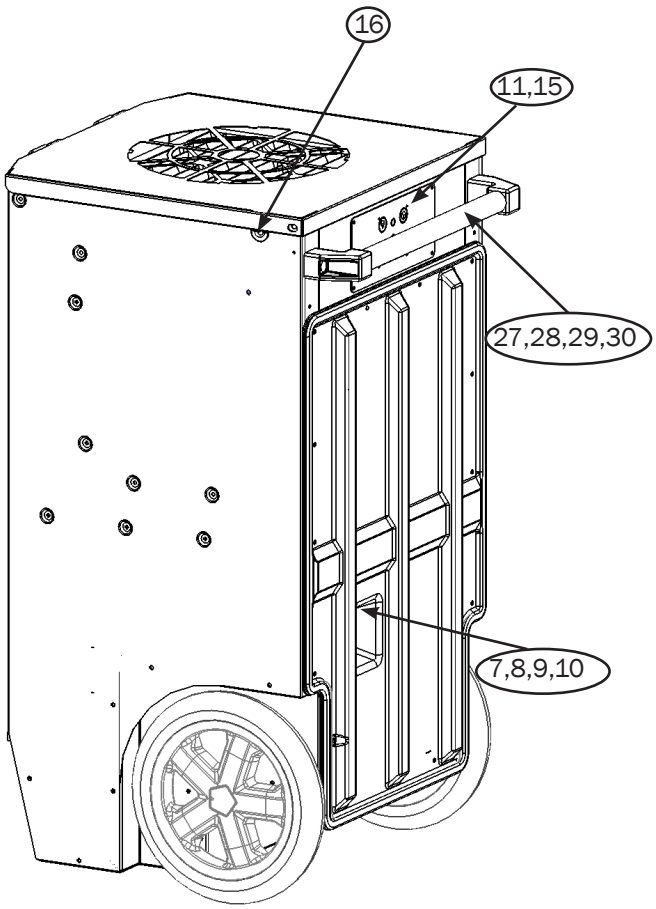

Specifications subject to change without notice.

This page intentionally left blank.

Phoenix 200HT Dehumidifier Limited Warranty

Warrantor:

Therma-Stor LLC

[redacted]

Who Is Covered: This warranty extends only to the original end-user of the Phoenix 200HT dehumidifier, and may not be assigned or transferred.

First Year Warranty: Therma-Stor warrants that, for one (1) year the Phoenix 200HT dehumidifier will operate free from any defects in materials and workmanship, or Therma-Stor will, at its option, repair or replace the defective part(s), free of any charge.

Second Through Fifth Year Warranty: Therma-Stor further warrants that for a period of five (5) years, the condenser, evaporator, and compressor of the Phoenix 200HT dehumidifier will operate free of any defects in material or workmanship, or Therma-Stor, at its option, will repair or replace the defective part(s), provided that all labor and transportation charges for the part(s) shall be borne by the end-user.

End-User Responsibilities: Warranty service must be performed by a Servicer authorized by Therma-Stor. If the end-user is unable to locate or obtain warranty service from an authorized Servicer, he should call Therma-Stor at the above number and ask for the Therma-Stor Service Department., which will then arrange for covered warranty service. Warranty service will be performed during normal working hours.

The end-user must present proof of purchase (lease) upon request, by reasonable and reliable means. The end-user is responsible for normal care. This warranty does not cover any defect, malfunction, etc. resulting from misuse, abuse, lack of normal care, corrosion, freezing, tampering, modification, unauthorized or improper repair or installation, accident, acts of nature or any other cause beyond Therma-Stor' reasonable control.

Limitations and Exclusions: If any Phoenix 200HT Dehumidifier part is repaired or replaced, the new part shall be warranted for only the remainder of the original warranty period applicable thereto (but all warranty periods will be extended by the period of time, if any, that the Phoenix 200HT Dehumidifier is out of service while awaiting covered warranty service).

UPON THE EXPIRATION OF THE WRITTEN WARRANTY APPLICABLE TO THE Phoenix 200HT DEHUMIDIFIER OR ANY PART THEREOF, ALL OTHER WARRANTIES IMPLIED BY LAW, INCLUDING MERCHANTABILITY AND FITNESS FOR A PARTICULAR PURPOSE, SHALL ALSO EXPIRE. ALL WARRANTIES MADE BY Therma-Stor ARE SET FORTH HEREIN, AND NO CLAIM MAY BE MADE AGAINST Therma-Stor BASED ON ANY ORAL WARRANTY. IN NO EVENT SHALL Therma-Stor, IN CONNECTION WITH THE SALE, INSTALLATION, USE, REPAIR OR REPLACEMENT OF ANY Phoenix 200HT DEHUMIDIFIER OR PART THEREOF BE LIABLE UNDER ANY LEGAL THEORY FOR ANY SPECIAL, INDIRECT OR CONSEQUENTIAL DAMAGES INCLUDING WITHOUT LIMITATION WATER DAMAGE (THE END-USER SHOULD TAKE PRECAUTIONS AGAINST SAME), LOST PROFITS, DELAY, OR LOSS OF USE OR DAMAGE TO ANY REAL OR PERSONAL PROPERTY.

Some states do not allow limitations on how long an implied warranty lasts, and some do not allow the exclusion or limitation of incidental or consequential damages, so one or both of these limitation may not apply to you.

Legal Rights: This warranty gives you specific legal rights, and you may also have other rights which vary from state to state.