FORCE 9

Vane Axial Fan

Ventilation Manual

Dry Air TECHNOLOGY

313 North Oak Street • Burlington, WA 98233 • USA
Tel: 360.755.9176 • Fax: 360.755.9236
Toll Free U.S. & Canada: 888.755.9176
Email: info@dryairtech.com • www.dryairtech.com

Dry Air TECHNOLOGY

FORCE 9 Vane Axial Fan

Congratulations on your purchase of the newest addition to Dry Air Technology's VAF (vane axial fan) product line. The ***Force 9*** has been designed to provide the superior performance, popular features, reliability, durability and portability you need for the toughest job.

The *Force 9* combines the features and performance desired by restoration professionals and Dry Air Technology's design, engineering and manufacturing expertise. The Force 9 takes the axial air mover revolution to a new level by producing by far the largest drying area of any axial air mover while maintaining low amp draw. It is the best choice for today's "in-place" drying techniques or when ever rapid evaporation is required.

Please read this owner's manual carefully to insure that you get the most from your unit.

SAFETY INFORMATION

CAUTION!
Unit operates on alternating current: 110/120 volt, 60 HZ

Do not operate your VAF series fan with a cut or frayed power cord. Do not unplug your unit by pulling on its cord. Grasp the plug firmly and pull it out of the wall socket or power receptacle. The plug has a safety ground pin installed that must not be removed. If the pin is damaged or missing, have the power cord replaced at once. Visually inspect the power cord before each use. Ignoring these safety precautions may result in a fire or an electric shock.

Never operate electrical equipment in standing water. There is a shock hazard.

Never drop the unit. Sudden and severe impact may result in damage to internal components.

Your VAF fan should never be operated with the safety grills removed. Personal injury may result.

Drop cloths or other loose fabrics can be drawn against the unit thereby restricting airflow. This condition may cause the unit to overheat. Keep the air inlet clear of any obstructions.

Save the shipping carton in case your VAF fan must be returned for repair.

This unit should never be serviced or cleaned while it is plugged into a live electrical power source.

WARNING: Ignoring these safety precautions may result in serious personal injury.

FORCE 9 Vane Axial Fan

OPERATING INSTRUCTIONS

The unit as packaged is ready to be put into service.
Inspect the unit completely for any shipping damage.
Place the unit on the ground or on a very stable platform.
Plug the unit into a grounded alternating current receptacle and switch the unit on.

To get the most out of your ***Force 9*** simply place fans along the perimeter of the room, and position each fan at a 30 degree angle to the wall. All airflow should be in the same direction. Then, place one or two fans in the center of the room on the stand with the fan blowing directly down on the carpet. For best results, move units approximately 18" along the wall each day.

MAINTENANCE

Warning!
Disconnect the unit from the power supply before cleaning or servicing.

Before each use the unit should be inspected for damage, clogged inlet or outlet, or any excess buildup of foreign material. When the unit is first turned on, check for excessive vibration, which could indicate a major problem. If the unit vibrates, have a service technician inspect the unit for the problem.

SPECIFICATIONS

VOLTAGE	110/120V
FREQUENCY	60 HZ
MOTOR	¼ HP
BLADE	17" 6-Blade Design
SPEED	High Speed 2.5 amps
	Low Speed 1.5 amps
RPM	1625
HEIGHT	22"
WIDTH	21"
LENGTH	15.5"
WEIGHT	32 lbs

Trouble Shooting

Problem	Cause	Solution
Unit will not run.	1. GFCI has tripped 2. No power to unit. 3. Switch not on. 4. Switch is faulty. 5. Faulty/broken cord or motor wire.	1. Reset GFCI, it must be a properly grounded receptacle. 2-A. Check the 15 amp circuit breaker on control panel. Reset if necessary. 2-B. Check the building fuse or circuit breaker. Reset breaker or replace fuse. 3. 3. Place in “ON” position. 4. Replace switch. 5. Perform continuity check, using volt/amp meter. Repair/replace faulty broken wire.
Unit runs but fan makes loud scraping noise.	1. Unit has been severely jolted causing fan to rub against housing. 2. Unit has been severely jolted causing housing to deform.	1. Remove motor and replace damaged motor mounts. 2. Replace fan blade.
Unit runs but vibrates excessively.	1. Severe jolt has bent motor shaft causing unit to be out of balance. 2. Fan blade damaged. 3. Dirt build up on one side of fan blade.	1. Remove and replace motor. 2. Replace blade if necessary. 3. Clean fan blade.
Unit runs but fan does not turn.	1. Fan is jammed against housing. 2. Capacitor wire has broken/come loose, capacitor has failed. 3. Housing has been damaged such that it presses on fan blade.	1. Remove motor and replace damaged motor mounts. Replace fan blade if necessary. 2. Repair/replace wires/capacitor as necessary. 3. Replace housing/unit as necessary.
Unit runs briefly, and then shuts off.	1. Motor bearings are failing or motor has developed an internal electrical fault. 2. Intake grill and/or exhaust grill is obstructed. 3. Excessive duct length.	1. Replace motor. 2. Remove obstruction. 3. Reduce the duct length to the recommended maximum.

Dry Air TECHNOLOGY

313 North Oak Street Burlington, WA 98233 USA
Tel: 360.755.9176 Fax: 360.755.9236
Toll Free U.S. & Canada: 888.755.9176
info@dryairtech.com • www.dryairtech.com

PARTS LIST

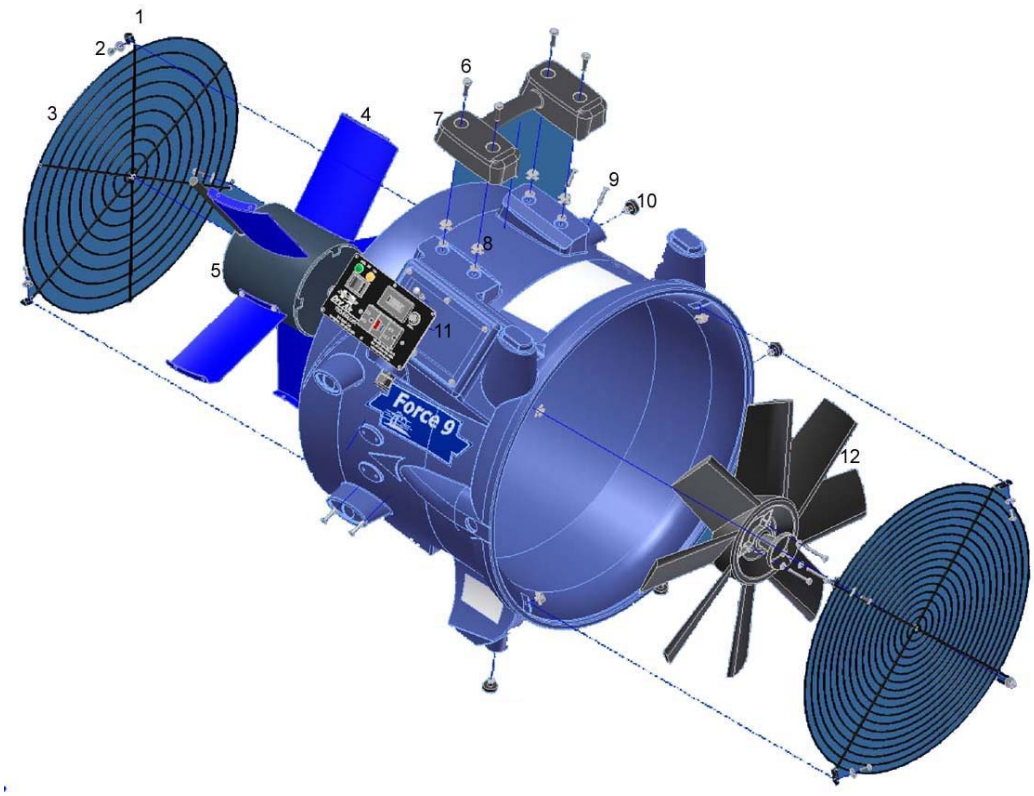

Item	Qty	Part Number	Description
1a	1	AF-00C-M5A10529	Outlet Grill
1b	1	AF-00C-M5A10528	Intake Grill
2a	3	RD-00F-S2AN0285	10/32 X ½” SS PPHMS for Outlet Grill
	3	AF-00F-S5AN0051	#10 Flat Washer SS
2b	4	AF-00F-S2AN0301	10-32 x ¾” SS Pan Head Screw for Intake Grill
	4	AF-00F-S5AN0051	#10 Flat Washer SS
3	1	AF-00C-P4A20527	Force 9 Shell
4	1	AF-00M-P4A10274	17” Fan Blade
5	1	AF-00M-M1A10273	2 Speed Motor
6	4	AF-00F-S3AN0293	10/32 X 1” pph ms ss
6b	4	AF-00F-S5AN0051	#10 Flat Washer
7	1	SV-00R-MNNN0028	Gray Handle
8	8	GN-00F-Z7AN0292	10-32 Jack Nut
9	10	GN-00F-S1NN0202	Rivet 3/16” Dia x ¾” Grip Alum A
10	5	GN-00C-RNN10006	Axial Feet
11	1		Switch Plate Assembly (See below)
12	1	AF-00M-P4A10274	17” Fan Blade
	1	AF-00E-NNHN0279	7.5mf 370v Capacitor
	1	CF-00E-N4A10004	Powercord 20’

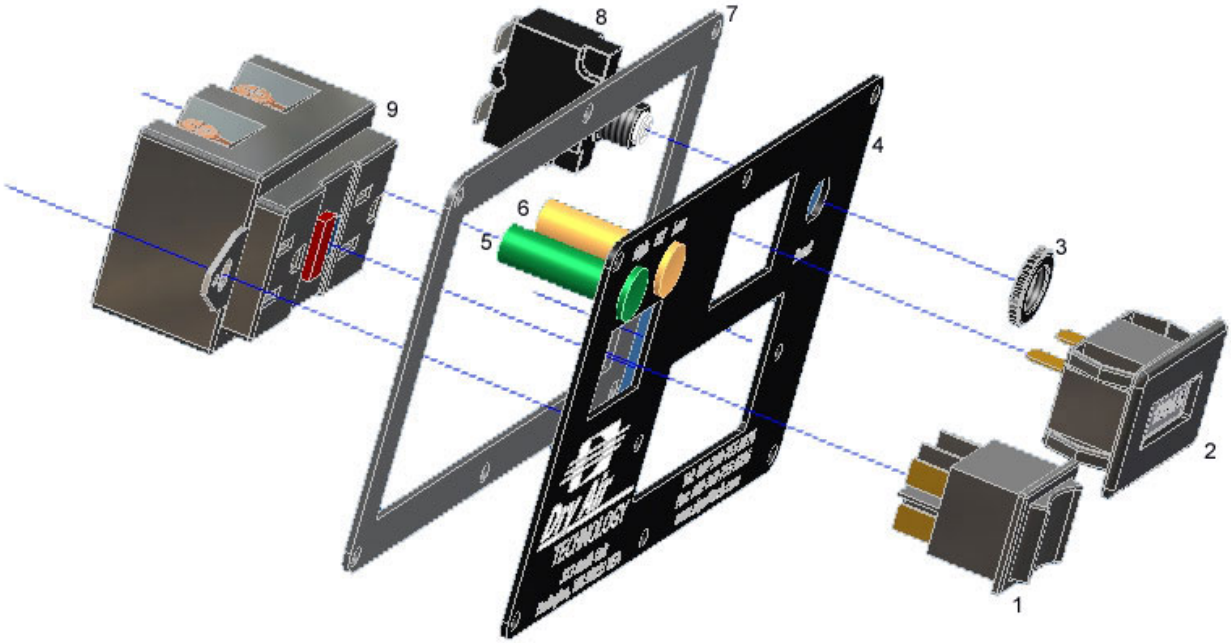

1	1	RD-00E-P3A10286	2 Spd 115V Switch
2	1	AF-00E-PNN10015	Strain Relief-LQ Tight #3213
3	1		Comes with Item #8
4	1	AF-00C-G2A10531	Switch Plate Black
5	1	GN-00E-P9A40251	Indicator Lamp Green
6	1	GN-00E-P9A50252	Indicator Lamp Amber
7	1	AF-00C-R6N10534	Switch Plate Gasket 17E
8	1	CF-00E-P1A10082	15A Circuit Breaker
9	1	AF-00E-P1A10278	GFCI Receptacle

Dry Air TECHNOLOGY

313 North Oak Street Burlington, WA 98233 USA
Tel: 360.755.9176 Fax: 360.755.9236
Toll Free U.S. & Canada: 888.755.9176
info@dryairtech.com • www.dryairtech.com

Dry Air TECHNOLOGY

RETURN AND REPAIR POLICY

RETURN AUTHORIZATION NUMBER (RMAs)

- Before a purchaser ships a product back to Dry Air Technology, the purchaser must obtain a valid RMA number by calling 1.888.755.9176. Boxes received without an authorized RMA number will be refused. When preparing the item for return please ensure that the RMA number is clearly visible on a label on the outer covering.

- Please have the following information ready when requesting an RMA number:
    1. Reason for return.
    2. Product (model) numbers and quantity to be returned.
    3. Serial numbers of each product.
    4. Customer name and return address.
    5. Company where product was purchased and when it was purchased.
    6. Copy of invoice and/or packing slip.

PACKAGING

Items must be returned in its original packaging. This includes the plastic sleeve the product came in, along with cardboard separators. Original packaging will help protect unit from freight damage upon return.

NON-RETURNABLE ITEMS

Items may not be returned to Dry Air Technology if items contain customer markings, stickers or damage.

The following conditions are NOT covered by our warranty and can be refused for credit or return:

1. Normal “wear and tear”
2. Improper packaging by customer causing freight damage.
3. Failure to provide a suitable operating environment
4. Use of the product for purposes other than those for which it was designed
5. Failure to monitor or operate the product in accordance with applicable seller specifications and good industry practice.
6. Unauthorized attachment, removal, or alteration of any part of the product
7. Unusual mechanical, physical, or electrical stress, scratches or dents
8. Modifications or repairs done by parties other than the seller
9. Abuse, misuse, neglect, or accidental damage

DAMAGED FREIGHT

Though it is a very rare occasion, shipping containers and/or their contents can be damaged during shipping. Open and inspect every package regardless of how the box looks. If the box is physically damaged and/or the parts are damaged, you must notate on the bill of lading that the box and/or the parts are damaged before you accept the shipment. DO NOT sign the bill of lading without notating the damage. Freight claims cannot be resolved without this notation from the recipient. If the box is fine and after opening and testing the unit you discover any internal damages call us immediately. In no case can we allow longer than 7 days to file a claim.

Dry Air Technology 10 Year Limited Warranty

Axial and Centrifugal Air Flow Products

Warrantor: Dry Air Technology, 313 North Oak Street, Burlington, WA 98233. Telephone: 888-755-9176, local: 360-755-9176, fax: 360-755-9236.

Who Is Covered: This warranty extends to the original end-user of axial and centrifugal air flow devices manufactured by Dry Air Technology, and may not be assigned or transferred.

Warranty Period: The term of the warranty coverage from the date of purchase is:

10 years on the cabinet, chassis and housing

1 year on parts, labor and reasonable shipping costs, excluding filters and accessories.

Warranty Coverage: Dry Air Technology warrants that, for one year, axial and centrifugal air flow devices manufactured by Dry Air Technology will operate free from defects in material or workmanship, or Dry Air Technology, at its option, will repair or replace the defective part(s), free of charge.

Dry Air Technology further warrants that for a period of ten (10) years, the cabinet, chassis and housing of axial and centrifugal air flow devices manufactured by Dry Air Technology, will be free from defects in material or workmanship, or Dry Air Technology, at its option, will repair or replace the defective part(s), provided that all labor and shipping costs for the defective part(s) shall be borne by the end-user.

This warranty does not cover any defect, malfunction, etc. resulting from misuse, abuse, lack of normal care, corrosion from chemicals, freezing, tampering, modification, unauthorized or improper repair or operation, accident, acts of nature or any other cause beyond Dry Air Technology's reasonable control.

End-User Responsibilities: Warranty service must be performed by a firm or individual authorized by Dry Air Technology. If the end-user is unable to locate or obtain warranty service from an authorized firm or individual, he should contact Dry Air Technology at the above location, which will arrange for covered warranty service. All covered warranty service will be performed during normal business hours.

Limitations and Exclusions: If any part of a axial or centrifugal air flow device manufactured by Dry Air Technology is repaired or replaced, the new part shall be warranted only for the remainder of the original warranty period of the air flow device (but all warranties will be extended by the period of time, if any, that the Dry Air Technology air flow device is out of service while waiting for covered warranty service).

UPON THE EXPIRATION OF THE WRITTEN WARRANTY APPLICABLE TO THE DRY AIR TECHNOLOGY AIR FLOW DEVICE OR ANY PART THEREOF, ALL OTHER WARRANTIES IMPLIED BY LAW, INCLUDING MERCHANTABILITY AND FITNESS FOR A PARTICULAR PURPOSE, SHALL ALSO EXPIRE. ALL WARRANTIES MADE BY DRY AIR TECHNOLOGY ARE SET FORTH HEREIN, AND NO CLAIM MAY BE MADE AGAINST DRY AIR TECHNOLOGY BASED ON ANY ORAL WARRANTY. IN NO EVENT SHALL DRY AIR TECHNOLOGY, IN CONNECTION WITH THE SALE, OPERATION, REPAIR OR REPLACEMENT OF ANY DRY AIR TECHNOLOGY AIR FLOW DEVICE OR PART THEREOF BE LIABLE UNDER ANY LEGAL THEORY FOR ANY SPECIAL, INDIRECT OR CONSEQUENTIAL DAMAGES INCLUDING WITHOUT LIMITATION WATER DAMAGE (THE END-USER SHOULD TAKE PRECAUTIONS AGAINST SAME), LOST PROFITS, DELAY, OR LOSS OF USE OR DAMAGE TO ANY REAL OR PERSONAL PROPERTY.

Some states do not allow limitations on how long an implied warranty lasts, and some do not allow the exclusion or limitation of incidental or consequential damages, so one or both of these limitations may not apply to you.

Legal Rights: This warranty gives you specific legal rights, and you may also have other rights which vary from state to state.

DRY AIR TECHNOLOGY, BURLINGTON, WASHINGTON