BlueWave Trilobe

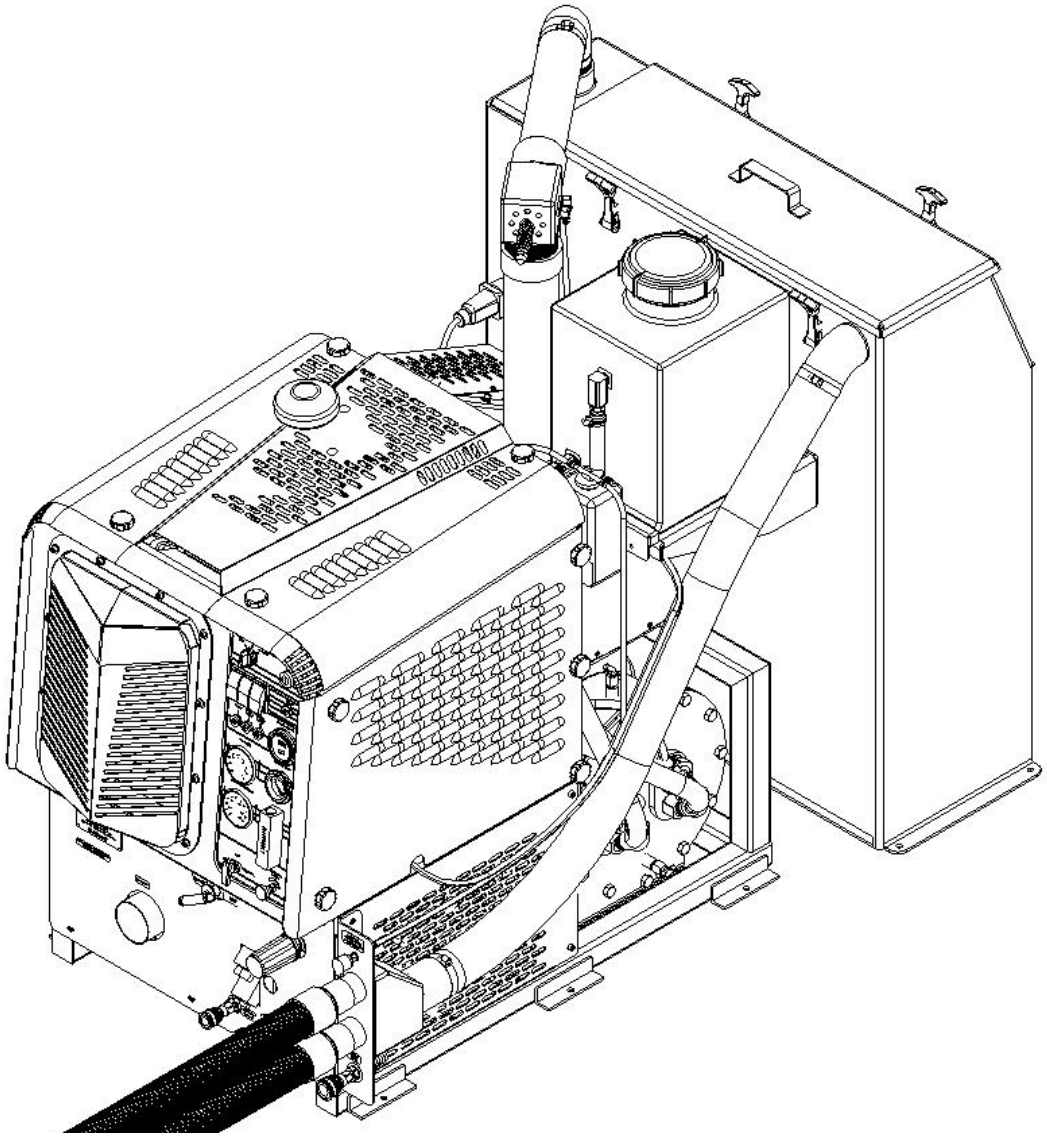

Service and Operation Manual

BLUELINE Equipment Co. LLC
2604 Liberator Dr., Prescott, AZ 86301 1-928-445-3030

Congratulations on your purchase of the **BLUEWAVE**® truck mount cleaning unit. This instruction/parts manual is a guide for operating and servicing your **BLUE**LINE truck mount unit.

Proper operation and service are necessary to ensure the outstanding performance of this unit. When properly maintained, your truck mount will have a long and trouble-free life.

The following service methods outlined in this manual are detailed in a manner that operation and servicing may be performed properly and safely. Because service levels vary due to the skill of the mechanic, tools and parts availability, ensure that prior to attempting any repair, you are familiar with this equipment and have the proper tools. Any questions regarding the operation, service, or repair of this unit should be directed to your nearest **BLUE**LINE dealer.

The headings **WARNING** and **CAUTION** are utilized to warn you that steps must be taken to prevent personal injury or damage to the equipment. Please make sure that you have read and understand these instructions entirely before proceeding with the operation of this unit.

THIS UNIT MUST BE INSTALLED BY THE DEALER THAT YOU PURCHASED IT FROM IN ACCORDANCE WITH THE BLUELINE **INSTALLATION PROCEDURES.**

PLEASE ENSURE THAT THE WARRANTY CARD IS FILLED OUT BY THE DISTRIBUTOR THAT YOU PURCHASED THIS UNIT FROM AND RETURNED TO **BLUE**LINE.

Record your units serial number here for future reference or if you should need to contact the factory in the future for any reason.

S/N: _____

This service and operations manual is written specifically for **BLUE**LINE **BLUEWAVE**® Truck Mount Cleaning units manufactured by:

BLUELINE EQUIPMENT LLC

2604 Liberator Drive

Prescott, AZ 86301 USA

The information contained in this document is subject to change without notice and does not represent a commitment on the part of **BLUE**LINE EQUIPMENT LLC.

All rights reserved. Copyright 2004 by **BLUE**LINE EQUIPMENT LLC. No part of this work may be used or reproduced in any form or means without the express written consent and permission of **BLUE**LINE EQUIPMENT LLC.

Published by **BLUE**LINE EQUIPMENT LLC.
First printing: June 2004
Printed in USA

BLUEWAVE® MANUAL PART# 49-011

April 2006

LIMITED WARRANTY

BLUELINE warrants your machine to be free of defects in material and workmanship. This warranty shall extend to the designated parts for the specific period of time listed from the date of delivery to the user. If **BLUE**LINE receives notice of any defects during the warranty period, **BLUE**LINE will either, at its option, repair or replace products that prove to be defective. Any transportation, related service labor, normal maintenance and diagnostic calls are not included.

Gasoline Engine (Through manufacturer or local dealer)_____ 1 year
Vacuum Pump (Through manufacturer or local dealer)_____ 18 months
Water Pump_____ 1 year
Waste Pump_____ 1 year
Engine Heat Exchanger_____ 1 year
Wands (Excluding shut off valve and orifices)_____ 1 year
Waste and Water Tanks_____ 1 year
Pressure Regulator_____ 1 year
Battery (pro-rated) _____1 year
All Other Components_____ 1 year

This warranty shall not apply to defects caused by improper installation or operation, inadequate maintenance by the customer, unauthorized modification or misuse, improper repair, freezing or damage due to hard water scaling.

Electrical components, disposable filters, belts, hoses, fittings, o-rings and other service maintenance items are not under warranty. Components supplied by **BLUE**LINE, but provided by other manufacturers, will only be warranted to the extent that they are warranted to **BLUE**LINE.

To receive warranty service, products must be returned to a **BLUE**LINE designated service facility. The customer shall prepay shipping charges for products returned to **BLUE**LINE for warranty evaluation and **BLUE**LINE shall pay for the return of products to the customer.

BLUELINE makes no other warranty, expressed or implied, with respect to this product. **BLUE**LINE disclaims the implied warranties of merchantability and fitness for a particular purpose. Any implied warranty of merchantability or fitness is limited to the specific duration of this limited warranty.

This warranty gives the customer specific legal rights, and you may also have other rights that may vary from state to state, or province to province.

The remedies provided herein are the customer's sole and exclusive remedies. In no event shall **BLUE**LINE be liable for any direct, indirect, special, incidental, or consequential damages, whether based on contract, tort, or any other legal theory.

Table of Contents

SECTION ONE: GENERAL INFORMATION 1

1. SAFETY 2
Safety, Specifications, Installation, Fuel, Engine Oil, Chemical, Water Requirements

2. RECEIVING YOUR TRUCK MOUNT UNIT 7
Dealer Responsibility, Acceptance of Shipment, Equipment Listing, Optional Equipment

SECTION TWO: INSTALLATION 8

3. INSTALLATION 9
Lifting the Unit into the Vehicle, Positioning the Unit into the Vehicle, Fastening Down the Unit and Waste Tank, Dimensional Diagrams, Installation of Fuel Lines, Trailer Fuel Tank and Fuel Line Installation, Battery Connection, Fire Extinguisher, Console to Waste Tank Connection

SECTION THREE: OPERATION 14

4. SYSTEMS 15
Water Pumping System, Heat Transfer System, Vacuum System, Chemical System

5. OPERATION 19
Equipment setup, Instrumentation, Starting Your Unit, Priming the Chemical Pump, Waste Pump, Operation, Cleaning, Upholstery Cleaning, Stair Tool Cleaning, Flood Restoration, Shut Down and Daily Maintenance, Freeze Protection.

SECTION FOUR: MAINTENANCE and SERVICE 27

MAINTENANCE CHART 29
6. MAINTENANCE 30
7. GENERAL SERVICE ADJUSTMENTS 34
8. TROUBLESHOOTING 37

SECTION FIVE: PARTS and ACCESSORIES 46

9. ILLUSTRATED PARTS LISTINGS 47
10. ACCESSORIES 78

SECTION 1: GENERAL INFORMATION

1. SAFETY

Safety	2
Specifications	5
Installation requirements	6
Fuel requirements	6
Engine oil requirements	6
Chemical requirements	6
Water requirements	6

2. RECEIVING YOUR TRUCK MOUNT UNIT

Dealer responsibility	7
Acceptance of shipment	7
Equipment listing	7
Optional equipment	7

1. SAFETY

⚠ WARNING For Your Safety!

The following **WARNING l**abels are on your **BLUEWAVE**® console. These labels point out important **Warnings and Cautions,** which must be followed at **all** times. Failure to follow warnings could result in personal injury, fatality, to yourself and/or others or property damage. Please follow these instructions carefully! **DO NOT remove these decals**.

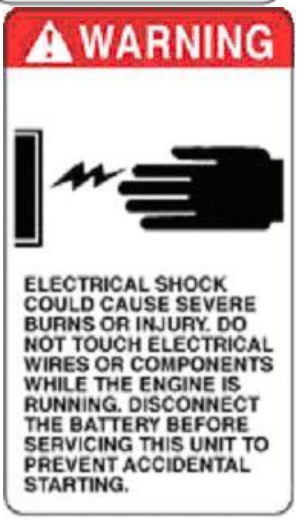

⚠ WARNING!

1**. Read the operator's manual before starting this unit.**

Failure to adhere to instructions could result in severe personal injury or could be fatal.

2**. Operate this unit and equipment only in a well- ventilated area.**

Exhaust fumes contain carbon monoxide, which is an odorless and deadly poison that can cause severe injury or death. **DO NOT** run this unit in an enclosed area. **DO NOT** operate this unit where the exhaust may enter a building doorway, window, vent or other opening.

3**. Gasoline is extremely flammable and its vapors can explode if ignited.**

Store gasoline only in approved containers, in well-ventilated, unoccupied buildings and away from sparks or flames. Never carry gasoline or any flammable materials in the vehicle. Fumes could accumulate inside of the vehicle and ignite, causing an explosion.

4. This unit must be operated with the vehicle doors open in order to ensure adequate ventilation to the engine.

5. **DO NOT** operate unit if gasoline is spilled. Do not turn ignition switch until the gasoline has been cleaned up. Never use gasoline for cleaning purposes.

6. **DO NOT** place hands, feet, hair, clothing or any body parts near rotating or moving parts. Rotating machinery can cause severe injury or death.

7. **NEVER** operate this unit without belt and safety guards. High speed moving parts, such as belts and pulleys, should be avoided while the unit is running. Severe injury, fatality or damage may result.

8. **NEVER** service this unit while it is running. High speed mechanical parts as well as high temperature components may result in injury or severed limbs.

9. Engine components will be extremely hot from operation. To prevent severe burns, **DO NOT** touch these areas while the unit is running or shortly after the unit is shut off.

10. **DO NOT** touch any part of the exhaust system while the system is running or for 20 minutes after the unit is shut off. Severe burns could result.

11. **Water under high pressure at high temperature can cause burns, severe personal injury, or fatality**. Shut down unit, allow to cool down and relieve system of all pressure before removing caps, valves, plugs, fittings, filters or hardware.

12. **NEVER** leave the vehicle engine running while the unit is in operation.

13. **Battery acid contains sulfuric acid**. To prevent acid burns, avoid contact with skin, eyes and clothing. Batteries also produce explosive hydrogen gases while charging. To prevent fire or explosion, charge batteries only in a well ventilated area. Keep sparks, open flames, as well as other sources of ignition away from battery at all times. Remove all jewelry prior to servicing batteries. Keep batteries out of the reach of children.

Before disconnecting the negative (-) ground cable, ensure that all switches are in the off position. If on, a spark could occur at the ground connection terminal which could cause an explosion if hydrogen gas or gasoline vapors are present. ALWAYS disconnect the negative (-) terminal first.

14. **DO NOT** smoke around the machine. Gas fumes could accumulate and ignite. Battery

gases are extremely flammable. This will prevent possible explosions.

15. **DO NOT** damage the vehicle in any way during the installation. When routing fuel lines **DO NOT** configure the hose in any locations where the hose or vehicle could be damaged. Avoid contact with moving parts, areas of high temperature, brake lines, fuel lines, catalytic converters, exhaust pipes, mufflers or sharp objects.

16. **NEVER** cut or splice any of the vehicle fuel lines during fuel line installation. This will result in fuel leaks and potentially dangerous conditions. Use only the provided fuel hose for fuel lines. When going through the vehicle floor with fuel lines, always utilize bulkhead adaptors. This will prevent fuel leaks and ensure that hoses are not punctured by vehicle vibration abrasion.

17. **DO NOT** exceed your vehicles weight limit. The console with waste tank and accessories weighs approximately 1350 pounds. Make certain that the vehicle has the correct axle rating. This will prevent unsafe or hazardous driving conditions.

18. High back seats are required for all vehicles that units are to be installed for head and neck protection. Metal partitions between the seats and equipment are strongly recommended.

19. **DO NOT** operate this unit without the water supply on and attached. The water pump and other vital components could be seriously damaged if the unit is operated dry. This unit is equipped with a low pressure shut down switch, which should **NOT** be bypassed.

20. Always keep your vehicle clean and orderly. Wands, tools and accessories must be securely stowed while driving the vehicle.

21. All high-pressure hoses must be rated at 3000 PSI and have a heat rating of 250 degrees F. Thermoplastic hoses do not meet this criteria and should never be used. Severe burns and other injuries could result if hoses do not meet these requirements.

22. Ensure that you have received proper training from the distributor that you purchased the unit from prior to operation.

23. This unit produces high pressure and high temperatures. Improper use could result in serious injury.

24. **DO NOT** modify this unit in any manner. Any modification could result in serious injury or fatality.

25. California Proposition 65 Warning: Engine exhaust from this product contains chemicals known by the State of California to cause cancer, birth defects, or other reproductive harm.

SPECIFICATIONS

Engine Speed	3000 rpm (High speed carpet) 2400 rpm (Low speed upholstery) 1500 rpm (Idle)
Water Pump RPM	1550 rpm
Vacuum Pump RPM	3360 rpm @ 405 cfm
Water Flow Rate	4.2 GPM (maximum)
Water Pump Pressure	1200 PSI (maximum)
Vacuum Relief Valve	13 in. HG
Waste Tank Capacity	70 Gallons at shutoff
Console Weight	980 lbs.
Console Weight (with waste tank & accessories)	1360 lbs. (1910 lbs w/full waste tank)

TORQUE VALUES

Engine Hub	324 inch/lbs. 27 ft/lbs.
Vacuum Pump Hub	192 inch/lbs. 16 ft/lbs.

JET SIZING

BLUELINE recommends that the total floor tool tip size does not exceed .06". Using larger jet sizes on your **BLUEWAVE**® unit may reduce cleaning temperatures.

Example: Four-jet wand uses four 95015 jets. (95 deg. Spray angle w/015 orifice)
.015 x 4 = .06

When using two wands while cleaning with this unit, BLUELINE recommends that the tip size in each tool does not exceed a total of .040".

Example: Four-jet wand uses four 9501 jets. (95 deg. Spray angle w/01 orifice)
.01 x 4 = .04 .04 x 2 tools = .08

Upholstery tool jet size: 80015 Stair tool jet size: 9502

INSTALLATION REQUIREMENTS

Prior to beginning the installation, read the ENTIRE "Installation" section of this manual. Since the **BLUEWAVE®** truck mount unit weighs (with waste tank and accessories) 1350 lbs., please adhere to the following recommendations prior to installing the unit.

1. The unit should **NOT** be installed in any motor vehicle of less than 3/4 ton capacity.

⚠ CAUTION!

The console and waste tank with accessories must NOT exceed the vehicles axle weight limit.

2. If mounting the unit in a trailer, ensure that the trailer is rated for the total weight of the **unit and trailer.** Electric or hydraulic brakes must be provided, and strict compliance with all State and Federal laws must be maintained.

3. If mounting in a trailer, the **BLUEWAVE®** console must be positioned so that it balances properly with respect to the trailer axle. Ten percent (10%) of the units total overall weight (w/o accessories or water) should be on the tongue.

4. The vehicle tires must have a load rating in excess of the combined unit and vehicle weight.

5. **BLUE**LINE does not recommend using any type of flooring materials that absorb water. This condition will result in rust and corrosion of the vehicle floor.

6. Insulation under rubber mats should be removed prior to installation of the unit.

FUEL REQUIREMENTS

Use unleaded fuel ONLY. NEVER use any gasoline additives. Use only fresh, clean unleaded gasoline intended for normal automotive use. **DO NOT** use high-octane gasoline with this unit.

ENGINE OIL REQUIREMENTS

We recommend that you use high quality detergent oil that meets at least API (American Petroleum Institute) service class SH or higher. Select the proper viscosity based on the air temperature during the time of operation. (See attached table). **NOTE:** the use of less than service class SH oil or extending oil change intervals longer than recommended can cause engine damage.

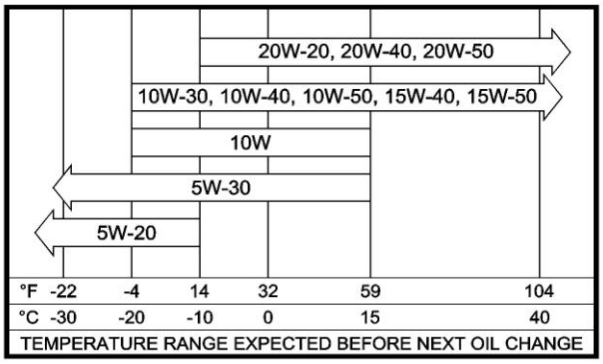

CHEMICAL REQUIREMENTS

The **BLUE**LINE **BLUEWAVE®** truck mount unit's unique last step chemical injection system can be used with a wide variety of water diluted chemical compounds, either acidic or alkaline, depending on the work to be performed. We recommend using only the highest quality chemistry.

WATER REQUIREMENTS

Because hard water deposits will damage the plumbing and heat exchange systems on this unit, **BLUE**LINE recommends that a high quality water softener be used in areas where the water hardness exceeds 3-1/2 grains. If a water softener is used, it must have a flow capacity of at least five (5) GPM or greater, without any hose constrictions.

The use of a water softening system will reduce maintenance and reduce down time caused by hard water scaling. It will also enhance the performance

of cleaning chemicals, which will result in greater efficiency in lower concentrations.

2. RECEIVING YOUR TRUCK MOUNT UNIT

DEALER RESPONSIBILITY

THE **BLUE**LINE DEALER THAT YOU PURCHASED THIS TRUCK MOUNT CLEANING UNIT FROM IS RESPONSIBLE FOR THE PROPER INSTALLATION OF THIS MACHINE. THE DEALER IS ALSO RESPONSIBLE FOR THE PROPER INITIAL TRAINING OF YOUR OPERATORS AND MAINTENANCE PERSONNEL.

ACCEPTANCE OF SHIPMENT

Your **BLUEWAVE**® truck mount cleaning unit was thoroughly tested, checked and inspected in its entirety prior to leaving our manufacturing facility. **When receiving your unit, please make the following acceptance check:**

1. The unit should not show any signs of damage. If there is damage, notify the common carrier immediately.

2. Carefully check your equipment and packing list. The standard **BLUE**LINE **BLUEWAVE**® unit should arrive with the following items as well as any optional accessories:

EQUIPMENT LISTING

A**. BLUE**LINE **BLUEWAVE**® console.
B. Operation and Service manual.
C. Installation mounting plates and bolt down kit.
D. Hose clamps for vacuum and fuel hoses.
E. Carpet wand.
F. Waste tank with shutoff switch.
H. Waste tank filter and stainless steel strainer basket.
I. 100 ft. of 1/4 in. high pressure solution hose with quick connects.
J. 100 ft. of 2 in. vacuum hose
K. 1 vacuum hose connector.
L. 50 ft. water supply hose with quick connect.

OPTIONAL EQUIPMENT

A. Additional lengths of vacuum hose
Part # 18-003
B. Additional vacuum hose connectors
Part # 21-003
C. Additional high-pressure solution hoses
Part # 18-000
(With shutoff valve Part # 18-001)
D. Automatic waste pump kit
Part # 68-003
E. Demand pump system
Part # 68-002
F. KIT, FUEL HOOKUP CHEVY 97 TO 2002. FI
Part # 69-003FI
G. KIT, FUEL HOOKUP CHEVY/DODGE FI
Part # 69-004FI
H. KIT, FUEL HOOKUP FORD FI
Part # 69-005 FI
I. KIT, FUEL HOOKUP 2003 CHEVY FI
Part #69-018FI
J. KIT, 2004 TF ADAPTER CHEVY
Part # 69-032
K. KIT, 2004 TF FUEL INJ. CHEVY
Part # 69-033
L. ADAPTOR, 2004 FORD FUEL
Part # 69-041
M. ADAPTOR, 2004 FUEL INJ. FORD
Part #69-041FI

SECTION 2: INSTALLATION

3 INSTALLATION

Lifting the unit into the vehicle	9
Positioning the unit into the vehicle	9
Fastening down the unit and waste tank	9
Dimensional diagrams	10
Installation of fuel lines	12
Trailer fuel tank and fuel line installation	12
Battery Connection	12
Fire extinguisher	12
Console to waste tank connection	13

3. INSTALLATION

⚠ WARNING!!!

This unit must be bolted to the floor of the vehicle by an authorized BLUELINE **DISTRIBUTOR.**

LIFTING THE UNIT INTO THE VEHICLE

The **BLUE**LINE **BLUEWAVE®** weighs approximately 1020 lbs., a forklift is necessary to place the unit into the vehicle. Place the forks into the forklift slots from the front of the unit and make **CERTAIN** that the forks are spread to the maximum width of the unit.

POSITIONING THE UNIT INTO THE VEHICLE

Vehicles vary in size and openings. Owners have different preferences on where in the vehicle they want their units positioned. **BLUE**LINE strongly recommends a side door installation for the **BLUEWAVE®.** We **DO NOT** recommend a rear door installation.

1.Ensure that enough space is provided to assure adequate engine ventilation as well as room for service and maintenance.

2. The complete unit with waste tank and accessories **MUST NOT** exceed the vehicle's axle weight limit.

3. **NEVER** position the console closer than 12 inches from the bottom rear of the driver and passenger seats.

FASTENING DOWN THE UNIT AND WASTE TANK

⚠ CAUTION!!!

Prior to drilling any holes in the vehicle floor, ensure that while drilling, you will not damage the fuel tank, fuel lines, or any other vital components, which could affect the safety and or operation of the vehicle.

A. The console and waste tank mounting holes will serve as a template. Drill six (6) 13/32 in. diameter holes for the console and six (6) 13/32 in. diameter holes for the waste tank.

B. Using the provided mounting hardware kit:

1. Insert six (6) 3/8-16 x 2 ½ in. hex head cap screws with flat washers through the **BLUEWAVE®** console mounting holes, and six (6) 3/8-16 x 2 in. hex head cap screws with flat washers through the waste tank mounting holes.

2. Install the provided mounting plates underneath the vehicle floor.

3. Screw the provided 3/8-16 hex head lock nuts on to the mounting bolts and tighten until the console and waste tank are firmly attached to the vehicle floor.

DIMENSIONAL DIAGRAM REAR MOUNT TANK

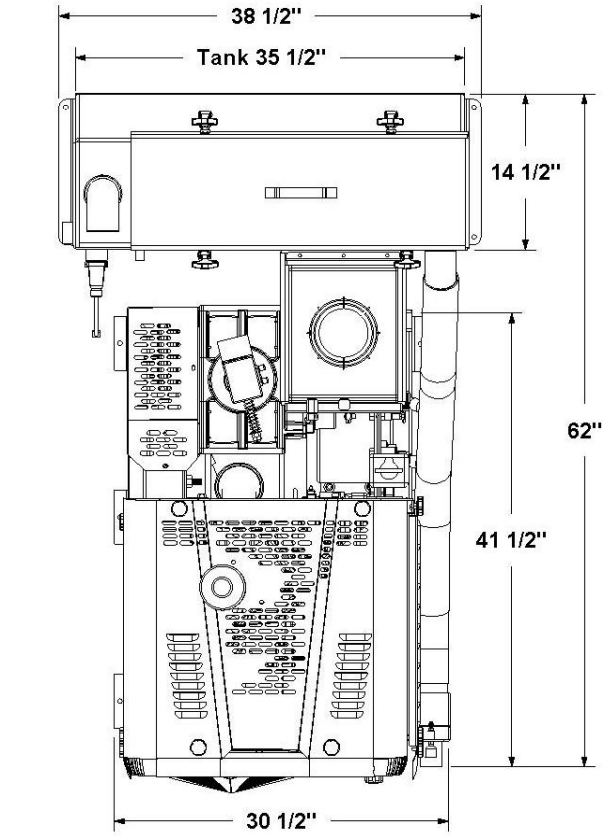

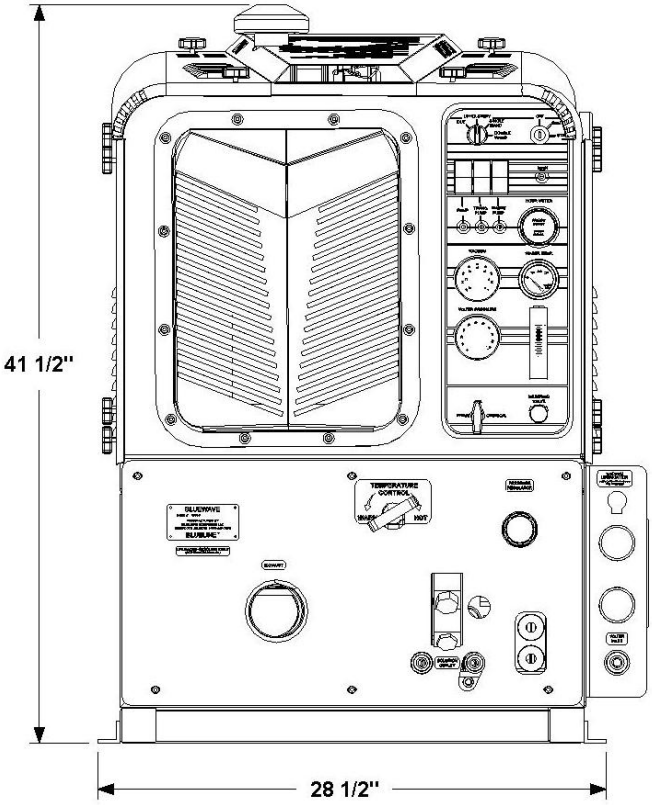

DIMENSIONAL DIAGRAM w/ SUB-MOUNT WATER TANK

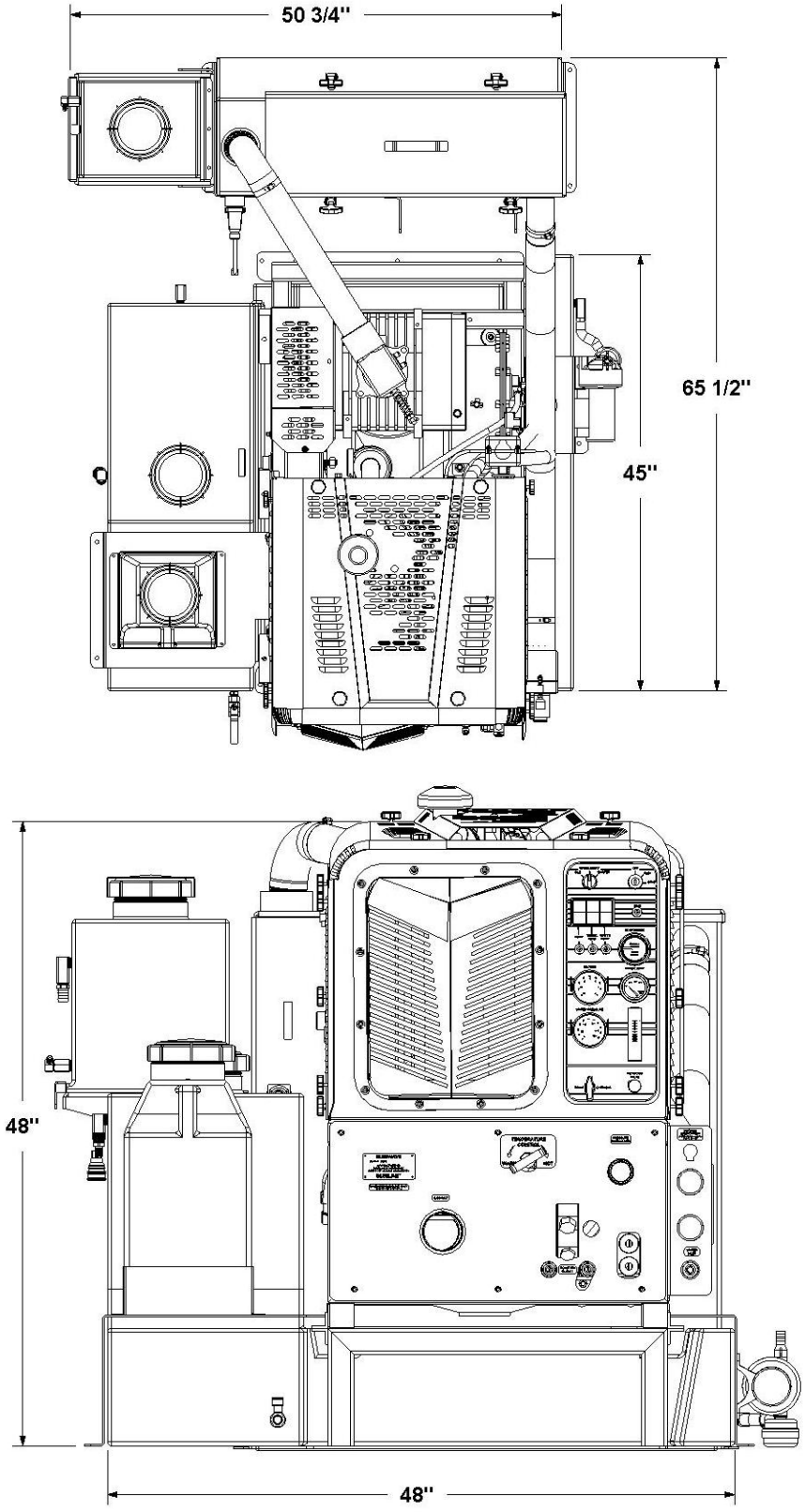

INSTALLATION OF FUEL LINES

⚠ CAUTION!!!

READ THESE INSTRUCTIONS IN THEIR ENTIRETY PRIOR TO PROCEEDING.

⚠ WARNING!

The Vehicle fuel lines should NOT be spliced under ANY circumstances. Severe injury or fatality could result.

DO NOT damage the vehicle in any way during the installation. When routing fuel lines **DO NOT** configure the hoses in any location where the hoses or vehicle could be damaged. Avoid contact with moving parts, areas of high temperature, brake lines, fuel lines, catalytic converters, exhaust pipes, mufflers or sharp objects.

TRAILER FUEL TANK AND FUEL LINE INSTALLATION

The following are recommendations for trailer installations:

A. Strict compliance with all federal and state laws must be maintained.

B. Use only fuel tanks that are manufactured specifically for gasoline, have proper vented filling caps, and outlet connections that are the same size as the inlet and return connections on the unit.

C. **DO NOT** install fuel tanks inside any type of enclosed trailer or vehicle.

⚠ WARNING!

NEVER carry gasoline or flammable materials in an enclosed trailer or vehicle.
NEVER store any type of flammable material in an enclosed trailer or vehicle.

D. Always mount fuel tanks where they will be protected from any vehicle collision.

E. When installing fuel lines from the fuel tank to the unit, use the proper size fuel line.

BATTERY CONNECTION

⚠ WARNING!

Explosive gases, Dangerous gases!
Batteries contain sulfuric acid. To prevent acid burns, avoid contact with skin, eyes and clothing. Batteries also produce explosive hydrogen gases while charging. To prevent fire or explosion, charge batteries only in a well ventilated area. Keep sparks, open flames, as well as any other sources of ignition away from batteries at all times. Remove all jewelry prior to servicing batteries. Keep batteries out of the reach of children.

Before disconnecting the negative (-) ground cable, ensure that all switches are in the OFF position. If ON, a spark could occur at the ground connection terminal, which could cause an explosion if hydrogen gas or gasoline vapors are present. ALWAYS disconnect the negative (-) terminal first.

A. Attach the red positive (+) battery cable from the starter solenoid on the console to the positive (+) terminal on the battery and tighten down the nut.

B. Attach the black negative (-) battery cable from the ground on the console to the negative (-) terminal on the battery and tighten down the nut.

FIRE EXTINGUISHER

BLUELINE **,** and many government agencies, recommend that a fire extinguisher rated for A, B, and C type fires be installed into any commercial vehicle.

CONSOLE TO WASTE TANK CONNECTION

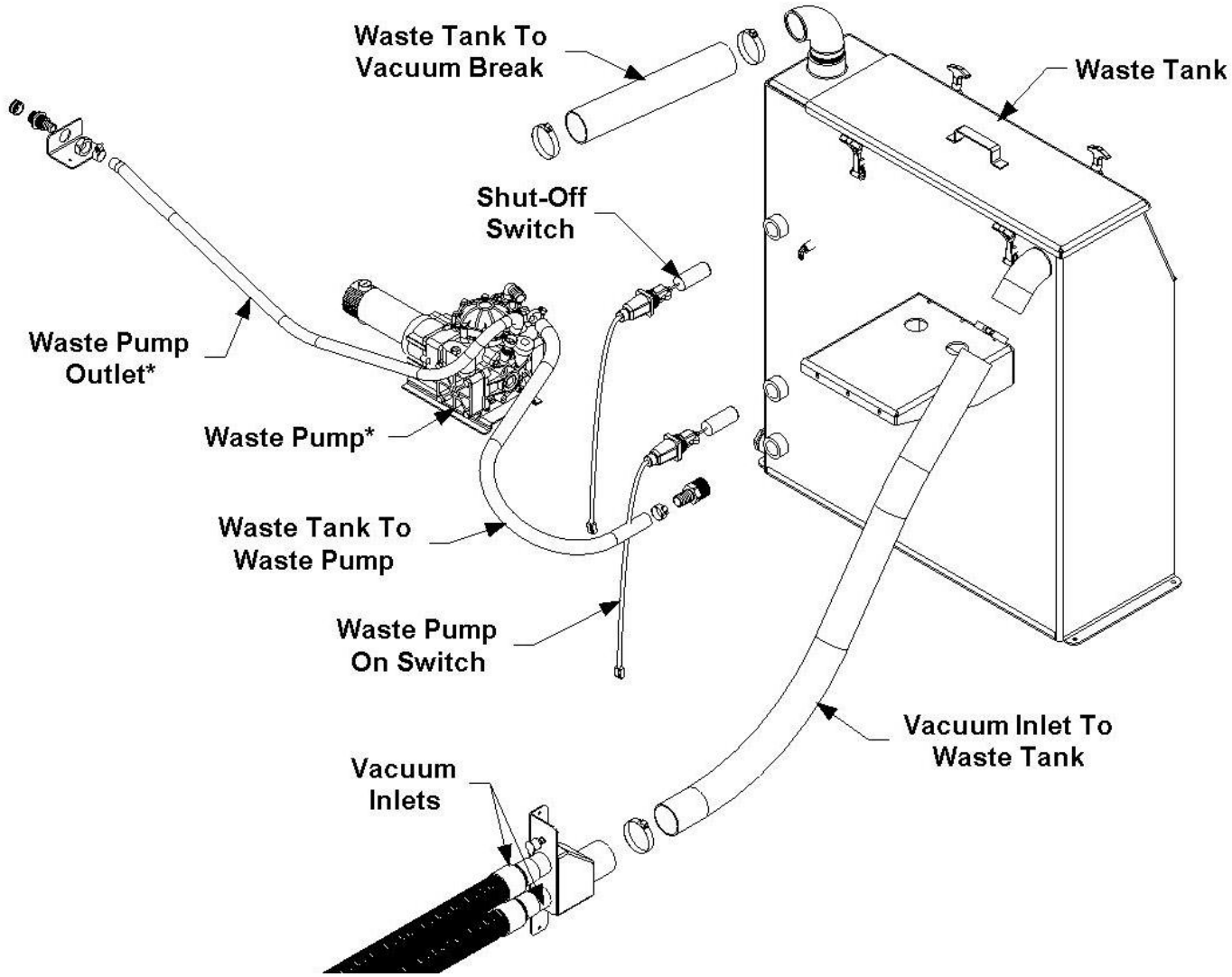

***Shown with optional waste pump out kit #68-003.**

SECTION 3: OPERATION

4. SYSTEMS

Water pumping system	15
Heat transfer system	16
Vacuum system	17
Chemical pumping system	18

5. OPERATION

Preparation	19
Starting the unit	21
Priming the chemical pump	22
Automatic waste pump	22
Operation	22
Cleaning	23
Upholstery cleaning	23
Stair tool cleaning	23
Flood restoration/extraction	23
Shut down and daily maintenance	23
Freeze protection	24

4. SYSTEMS

NOTE: Read and understand this section of the manual entirely before proceeding.

This portion of the manual divides the unit up into systems and describes how each system works. Prior to proceeding into the operations and maintenance sections of this manual it is recommended that you acquire a basic understanding of how the unit functions.

WATER PUMPING SYSTEM

See figures 3-1 and 5-10. Cold water enters the console through the water inlet connection located on the lower right corner of the right lower front panel. The water then flows to the water box through a float valve, which shuts off the water when the water box is full.

Water then flows through a strainer in the water box to the water pump. The water pump is plumbed to a nitrogen charged accumulator, which helps reduce pressure pulsations. The water pump assembly also includes a high-pressure and a low-pressure shutdown switch. These switches will shut down the unit if the water pressure exceeds 1200 PSI or drops below 50 PSI for more than 5 seconds.

Simultaneously, water is then pumped to the pressure regulator assembly, which provides and maintains the desired pressure setting.

Water then flows from the pressure regulator through the heli-coil engine coolant heat exchanger and into the blower exhaust heat exchanger, where it is super-heated by the blower exhaust.

The water then flows through the check valve manifold that contains a Y-strainer and a check valve. At this point, the chemical injection takes place.

The hot solution mixture of water and chemicals then flows through the solution outlet manifold to the cleaning tool.

Temperature is controlled with the temperature control valve. Water temperature is maintained by mixing cooler water from the water box with heated water from the heli-coil and the blower exhaust heat exchanger.

HEAT TRANSFER SYSTEM

See figures 3-1 and 5-10. Water is heated through a 2 stage heat exchange system that utilizes engine coolant and blower exhaust.

Stage one utilizes hot engine coolant pumped through a shell containing copper coils. The pressurized water flows through the copper coils and collects heat from the engine coolant. The water then flows to the second heat exchange system.

The second heat exchange system is a blower exhaust heat exchanger, containing a heating coil. Water flows through the coil and collects heat from the blower exhaust as it leaves the blower.

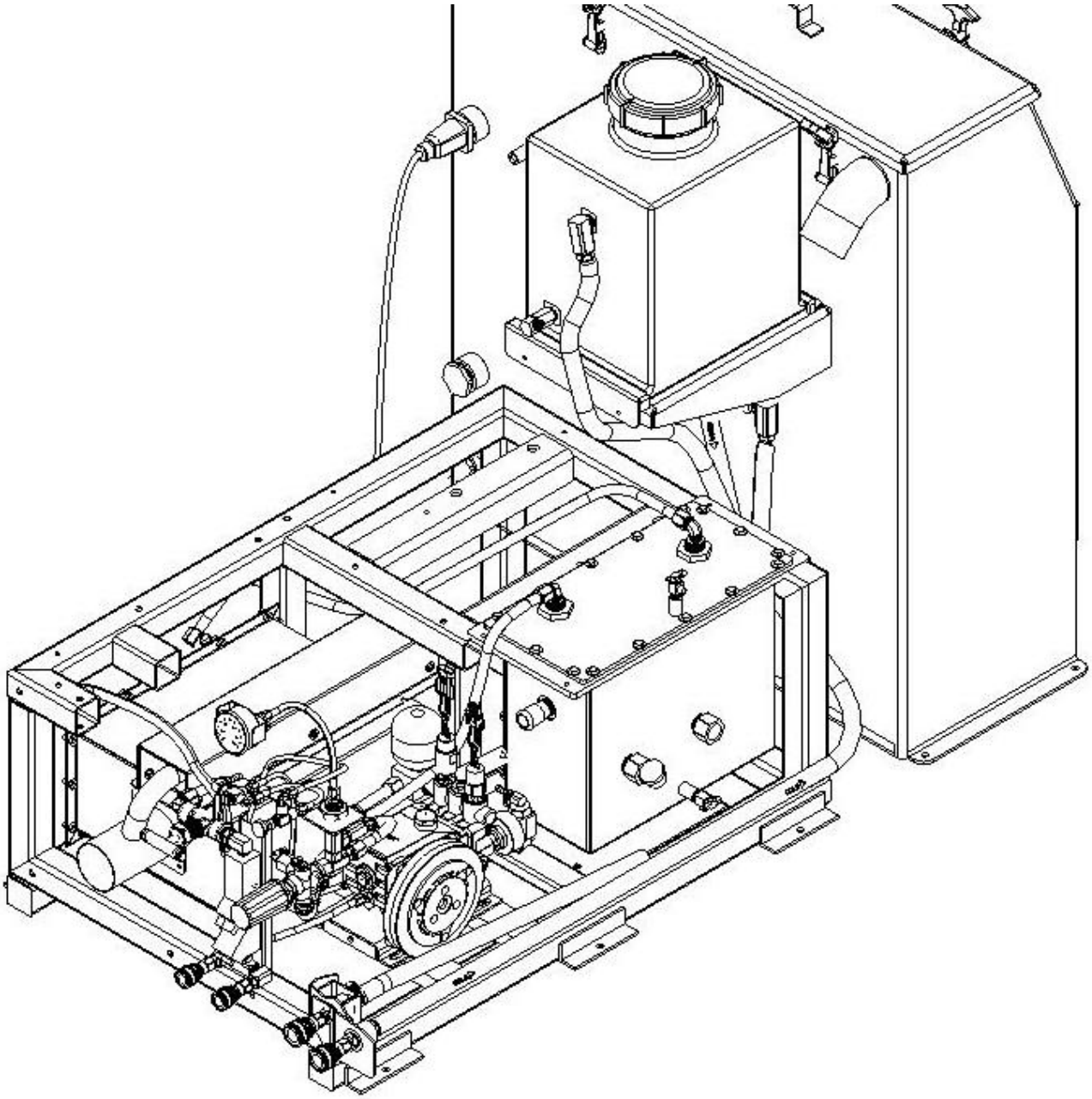

3-1

VACUUM SYSTEM

See figures 3-2 and 5-20**.** The vacuum flow is initiated by the vacuum pump, or blower. An air and water mixture is drawn into the vacuum inlet on the waste tank. The mixture flows through a strainer basket in the waste tank, and then into the tank. The air exits the waste tank through a 100 mesh filtration system, into the vacuum pump. A vacuum pump relief valve is installed for vacuum pump protection.

The air is discharged from the vacuum pump through a spiral silencer, and then through the vacuum pump exhaust heat exchanger.

A level shut off sensor is located near the top of the waste tank and will shut down the unit before the tank is at full capacity. This protects the vacuum pump from water damage. **Note:** Waste tank level shut off will not shut the unit off due to high levels of foam. The use of a quality defoamer is recommended.

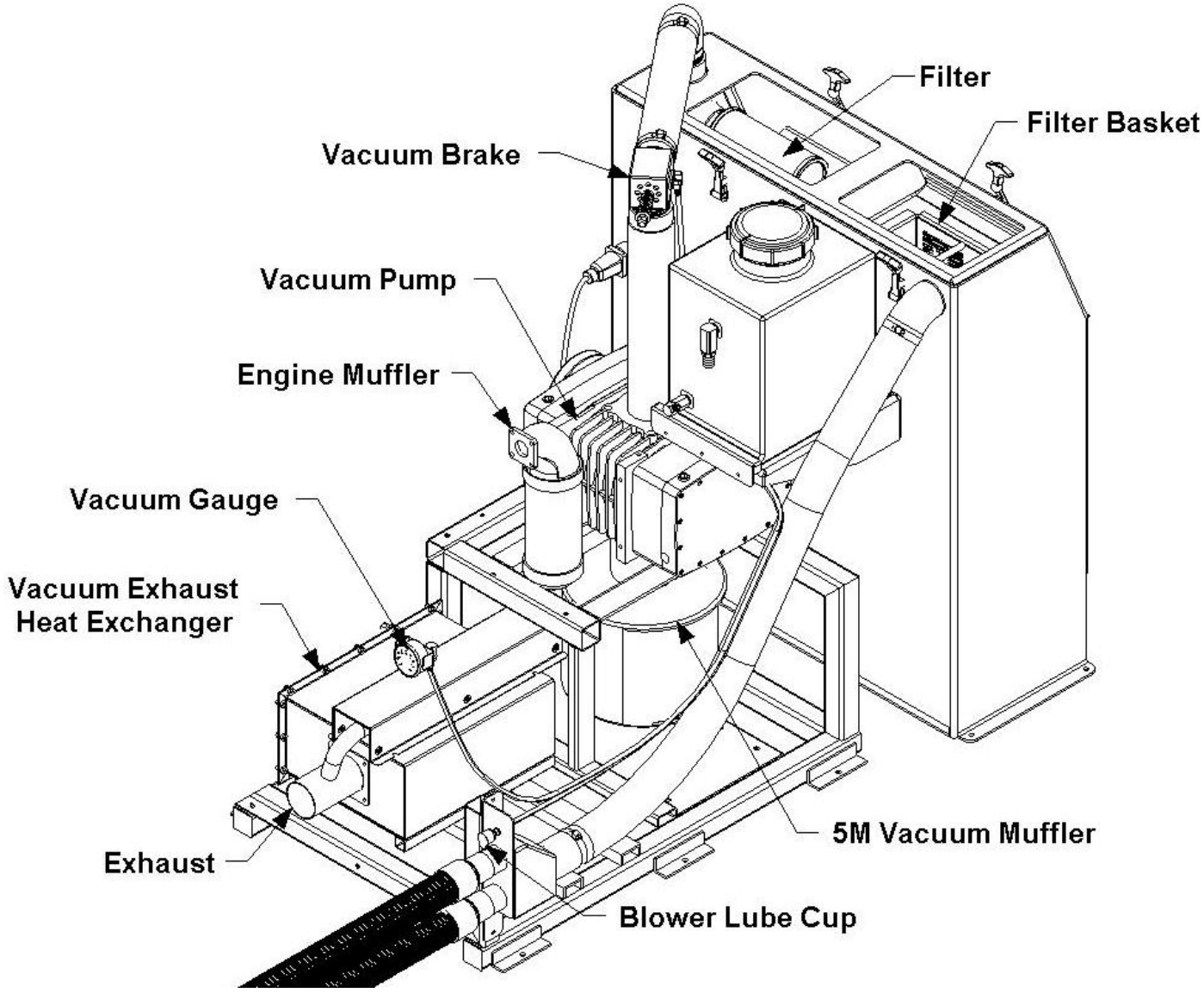

3-2

CHEMICAL PUMPING SYSTEM

See figures 3-3 and 5-25**.** The chemicals are drawn from the chemical jug through a strainer into the flow meter. The flow meter indicates the rate of chemical flow.

The chemicals then flow through the check valve into the stainless steel pulsation chemical pump. Then, the chemical pump injects the chemicals through the check valve to the three way selector valve located on the front panel. This valve may be used to turn the chemical flow **ON**, **OFF**, or to **PRIME** the chemical pump.

The chemicals then flow through the chemical metering valve to the solution outlet. This valve controls the rate of flow of chemical into the cleaning solution, which is indicated on the flow meter.

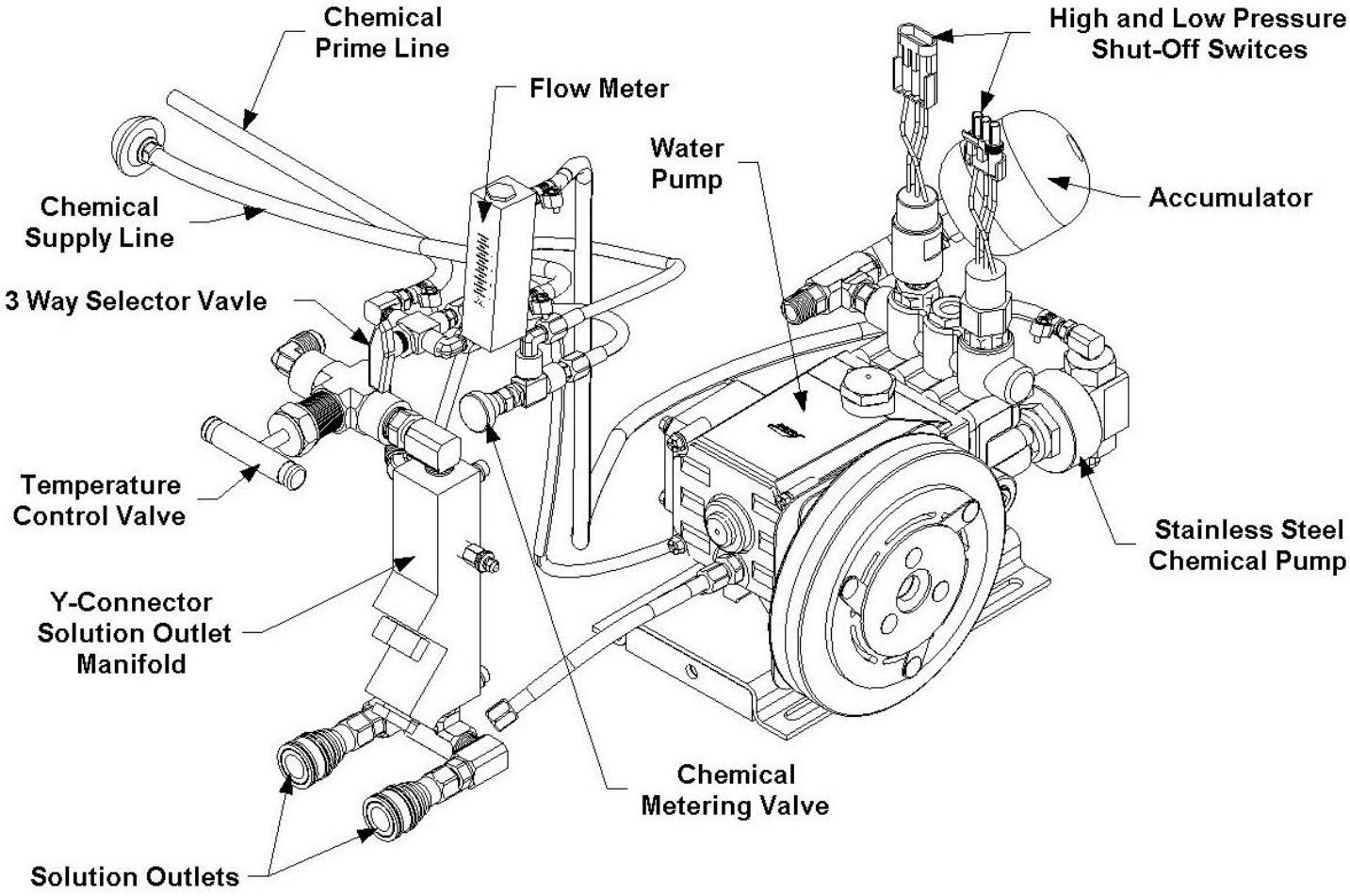

3-3

5. OPERATION

PREPARATION

This section of the operator's manual explains how to prepare, start, operate, shut down and maintain your **BLUE**LINE **BLUEWAVE**® mobile cleaning unit. The **BLUEWAVE**® unit is easy to operate, however only trained operators should proceed.

⚠ WARNING!

Operate this unit and equipment only in a well ventilated area. Exhaust fumes contain carbon monoxide, which is an odorless and deadly poison that can cause severe injury or death. DO NOT run this unit in an enclosed area. DO NOT operate this unit where the exhaust may enter a building doorway, window, vent or any other opening.

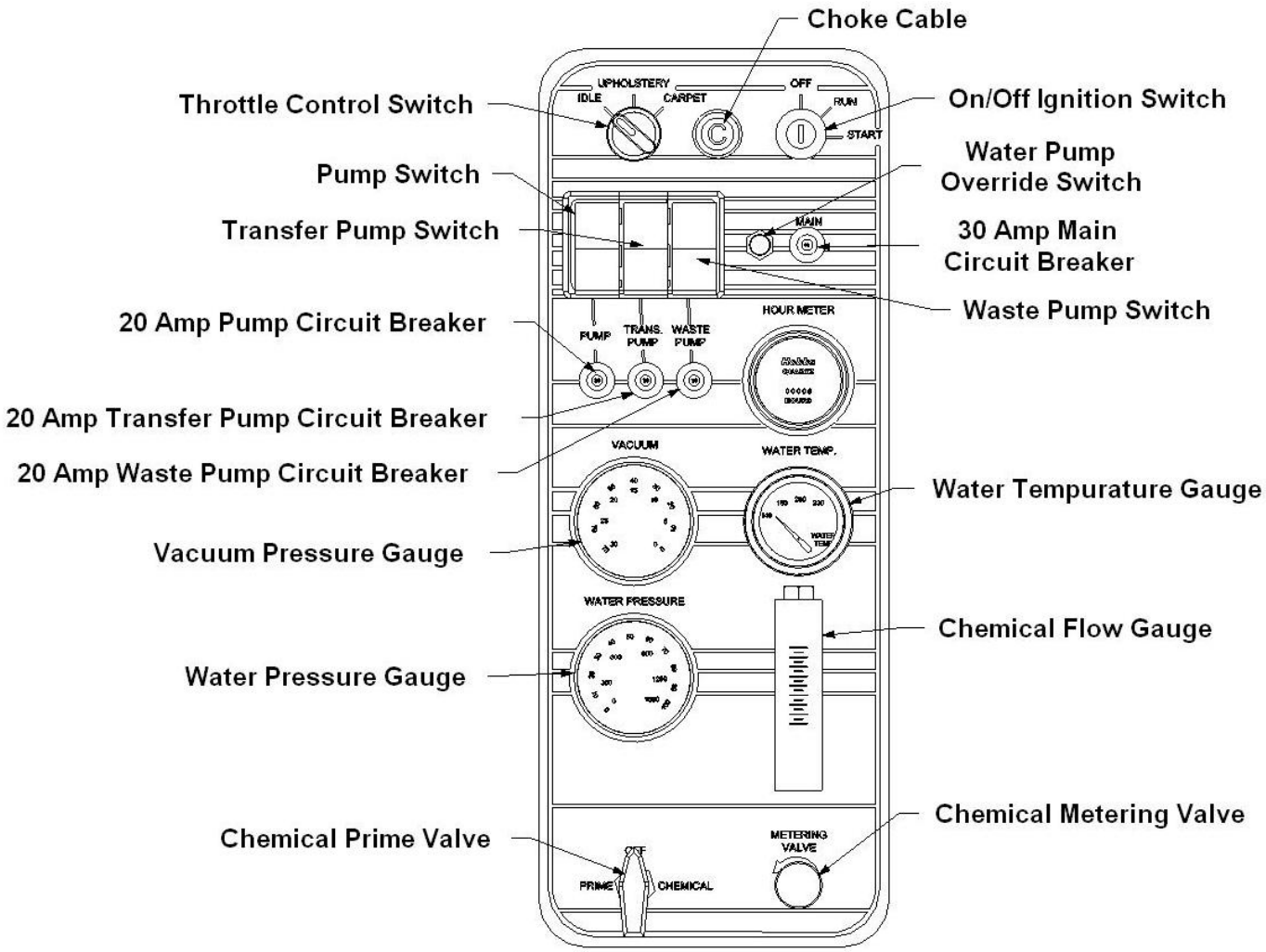

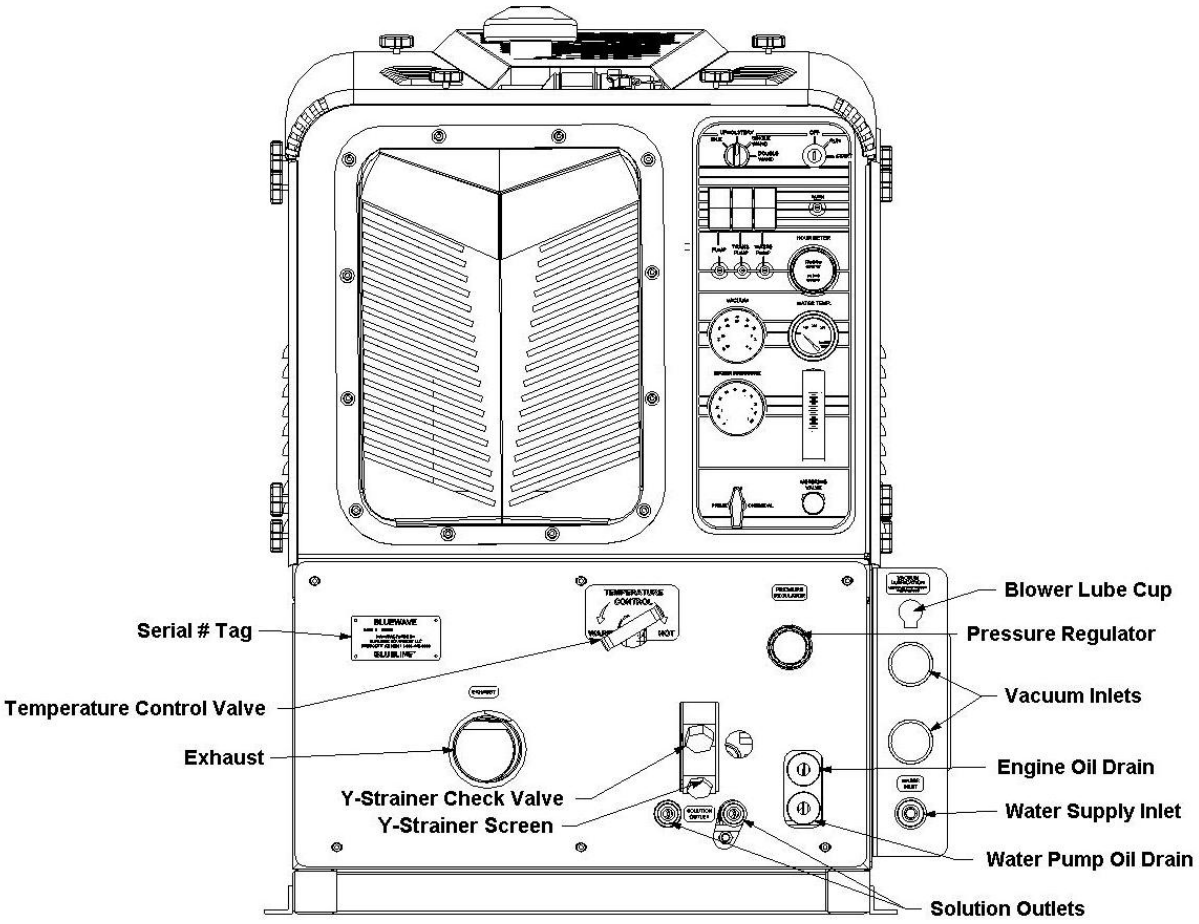

ENSURE THERE IS ADEQUATE FUEL

Check the fuel tank to ensure there is adequate fuel to complete the job and transport the vehicle. This unit consumes approximately 1.2 to 1.8 US gallons of fuel per hour, depending on the speed setting.

REMOVE TOOLS FROM THE VEHICLE

Remove any tools, accessories or hoses from the vehicle that you will require.

WATER SUPPLY CONNECTION

NOTE: Prior to connecting your water inlet hose to any supply faucet, flush out the faucet until the water is free of any debris. Also, flush out any debris from your water inlet hose.

1. Connect the water supply hose to the water inlet quick connector on the front of the unit. Connect the hose to the faucet.

NOTE: Never use a waste pump outlet hose as a water inlet hose. Use only clean hoses for water supply.

2. Turn the water supply faucet on. Water will fill the water box.

HIGH PRESSURE HOSE

Before starting the unit, connect the high pressure hoses to the solution outlet connection(s) at the front of the unit. Connect the cleaning tool(s) to the opposite end of the pressure hose(s).

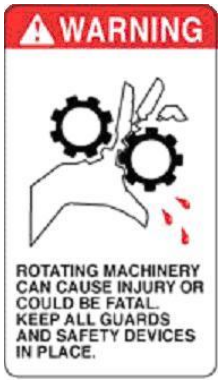

VACUUM HOSE

Connect the vacuum hose(s) to the vacuum inlet connection(s) at the front of the unit. Connect the opposite end of the vacuum hose(s) to the cleaning tool(s).

JET SIZING

BLUELINE recommends that the total floor tool size does not exceed ".06". Using larger jet sizes on your **BLUEWAVE®** unit may reduce cleaning temperatures.

Example: Four–jet wand uses four 95015 jets. (95 deg. Spray angle w/015 orifice)
.015 x 4 = .06

When using two wands while cleaning with this unit, **BLUE**LINE recommends that the tip size in each tool does not exceed a total of ".04".

Example: Four jet wand uses four 9501 jets. (95 deg. Spray angle w/01 orifice)
.01 x 4 = .04 x 2 tools = .08
Upholstery tool jet size: 80015.
Stair tool jet size: 9502

STARTING THE UNIT

⚠ CAUTION!

DO NOT operate this unit without constant water flow to the console.

The low-pressure switch will automatically shut down the unit if the water pressure in the system drops below 50 PSI, for more than 5 seconds.

The high-pressure switch will automatically shut down the unit if the water pressure in the system exceeds 1200 PSI, for more than 5 seconds.

1. Set the speed selector switch to the idle position.

2. Turn the ignition switch to the right intermediate position. Hold the switch in this position for approximately 3 seconds, allowing the fuel pump to pump fuel.

3. Turn the ignition switch to the furthest right position. This will engage the starter and start the engine. The engine will run at a high rate of RPM for a short period of time, then find its proper idle setting.

4. After the engine is running at its idle setting, select the desired speed setting using the throttle control switch.

5. Turn the water pump switch to the **ON** position.

NOTE: If the unit does not build water pressure after 5 seconds, check for adequate water supply. See "Loss of Water Pump Pressure in the "**Troubleshooting** section of this manual.

Allow adequate time for the water temperature to warm up before cleaning, approximately 10-15 minutes.

PRIMING THE CHEMICAL PUMP

NOTE: BLUELINE recommends that the chemical pump be primed whenever the water pump is on. This eliminates possible pressure fluctuations and water pump pulsations related with running the chemical pump dry.

1. Insert the chemical prime tube and the chemical inlet tube into the chemical jug.

NOTE: When inserting the chemical tube into the chemical jug, ensure that it stays fully submerged, as the chemical pump will not function if air is allowed to enter the inlet line. **DO NOT** operate the chemical pump without the inlet strainer properly installed.

2. Turn the 3-way chemical selector valve located on the control panel to the **PRIME** position. The chemical will then flow from the chemical jug through the chemical prime tube.

If the pump does not prime, then:

A. Place the chemical prime tube into the vacuum hose and seal off the vacuum hose. The vacuum will quickly draw chemical from the chemical jug. After the flow begins, turn the chemical selector valve to **OFF** position, insert the chemical prime tube back into the jug, and turn the chemical selector valve back to the **PRIME** position and continue the procedure.

B. Once chemical flow with no air bubbles has been achieved, turn the chemical selector valve from **PRIME** to **METER**. With the cleaning tool open, check the flow meter and adjust the chemical metering valve until the desired rate of chemical flow is achieved.

AUTOMATIC WASTE PUMP

1. If your unit is equipped with an optional automatic waste pump, connect one end of the 5/8 inch or larger garden hose to the pump-out connection and the other end to an acceptable waste disposal.

2. Turn the pump-out switch located on the front console control panel to the **ON** position. The waste pump will now operate automatically throughout the cleaning period.

DO NOT use an outlet hose that is smaller than 5/8 in. I.D.

NEVER use a waste pump hose as a water inlet hose.

⚠ WARNING!

NEVER dispose of waste water in a storm drain, water way or on ground areas. Always dispose of waste in accordance with Local, State and Federal laws.

OPERATION

After you have completed the previous steps, proceed with the cleaning operation. Place the throttle control switch to the desired cleaning mode for carpet, or upholstery cleaning. A float shut-off switch is located inside of the waste tank. It will automatically shut down the unit if the tank reaches its full capacity. If this occurs, empty the waste tank before continuing.

CLEANING

While cleaning, observe the following guidelines:

1. Before cleaning, ensure that the wand nozzles are functioning properly.

   A. Hold the wand approximately one foot above the surface to be cleaned and open the wand valve. A full even spray should emit from the cleaning nozzles.

   B. If the nozzles are not showing a full even spray pattern, adjust, clean, or replace the nozzles, if required.

2. Usually, chemical solution is applied during the push stroke of the wand during cleaning, and extraction is done on the pull stroke. For heavily soiled carpets, the wand may be used in a scrubbing action, with chemical solution applied in both push and pull strokes, provided that the final stroke is a pull stroke with no chemical injection.

UPHOLSTERY CLEANING

1. Upholstery tools have a lower flow rate and smaller orifices. To accommodate the desired cleaning temperature, operate the unit in the **upholstery** mode, by setting the throttle control switch on the front control panel to **upholstery.** Adjust the temperature control valve to the desired temperature. To maintain proper cleaning temperatures, make certain that the unit has been fully heated up prior to cleaning.

2. Always clean upholstery with a pressure setting below 300 PSI, by using the pressure regulator on the unit.

STAIR TOOL CLEANING

1. Set the throttle control switch on the front control panel to the **CARPET** setting. Adjust the temperature control valve to the desired temperature. To maintain proper cleaning temperatures, make certain that the unit has been fully heated up prior to cleaning.

FLOOD RESTORATION/EXTRACTION

⚠ CAUTION!

1. Set the throttle control switch on the front control panel to the desired setting. Make certain that the **water pump switch** is in the **ON** position. Proceed into the extraction process

SHUT DOWN AND DAILY MAINTENANCE

1. Flush out the chemical system with fresh water to remove any chemical residue.

2. Remove as much moisture from the vacuum hoses as possible. This will prevent spillage of wastewater in your vehicle when returning hoses.

3. Disconnect the vacuum hoses from the front of the unit.

4. Turn the throttle control switch to the **IDLE** position.

5. Adjust the temperature control valve to the hot water position.

6. Allow the unit to run for at least **2 minutes** or until the water temperature is at or below 180 deg. F. This will also remove any moisture from the vacuum pump.

NOTE: If shutting down for the day: Plug the vacuum inlets on the front of the unit and set the throttle switch to **carpet**. Spray WD-40 (or equivalent) into the **blower lubrication cup,** located above the vacuum inlets for **5 seconds**. This will lubricate the vacuum pump. Next, return the throttle control switch to **IDLE** position**,** and continue step 4.

7. Turn the ignition switch to the **OFF** position.

8. Turn the water supply faucet off. Loosen the water supply hose at the water supply to bleed off the pressure. Unhook the water supply hose and return it to the vehicle.

9. Activate the valves on all cleaning tools. This will relieve any remaining pressure. Disconnect the cleaning tools and solution hoses and return them to the vehicle.

10. Drain the waste tank, disposing of wastewater in a suitable and proper location.

⚠ WARNING!

NEVER dispose of wastewater in a storm drain, water way or on ground areas. Always dispose of waste in accordance with Local, State, and Federal laws.

11. Remove the strainer basket from the waste tank. Clean out any debris and re-install.

NOTE: Damage may occur to the vacuum pump.
Replacement and maintenance of the filter will prevent rust and corrosion from entering the vacuum pump.

12. Inspect the vacuum inlet filter inside the waste tank **weekly**. Remove and clean the filter if there is any lint or debris present.

NOTE: To remove the vacuum inlet filter, grip the plastic hexagon section of the filter. Gripping the filter by the screen will collapse or destroy the filter. Replace the filter after cleaning until hand tight.
NEVER operate this unit with the filter removed, damaged or improperly installed.

13. At the end of the work day, rinse out the waste tank with fresh water. A deodorizer may be added to prevent bacterial growth.

14. Clean the vehicle interior, unit, tools, hoses etc., as needed. Inspect **ALL** equipment and accessories for any damage, leaks, wear, etc.

FREEZE PROTECTION

⚠ CAUTION!

If the unit is exposed to freezing weather conditions, the water inside of the unit may freeze, resulting in SERIOUS DAMAGE to the unit. The following is recommended to prevent this from occurring during the cold weather season:

1. Always park the unit in a heated building when not in use.

2. While out in operation, avoid long periods of shut down as the unit generates heat while running. Keep the unit running just prior to leaving for the next job.

3. If a heated building is not available, winterize the unit with anti-freeze.

It is not possible to winterize units that have auxiliary water tanks. If the unit has an auxiliary water tank(s), it must be stored in a heated building.

WINTERIZING YOUR UNIT WITH ANTI-FREEZE:

1. Shut off the water supply to the unit and disconnect the water inlet hose from the console.

2. Connect all solution hoses and tools that may have water in them, to the console.

3. Start the unit with the water pump in the **ON** position. Open a tool valve. This will result in the low-pressure switch shutting down the unit when the water box is emptied.

4. Fill the water box with two gallons of 100% glycol based anti-freeze.

5. Start the unit and set the throttle control to the **IDLE** position. Turn the water pump switch to the **ON** position. Open a tool valve until anti-freeze comes out of the tool. Repeat this procedure with **ALL** remaining tools and hoses.

6. After the tools and solution hoses have been filled with anti-freeze, disconnect and store them.

Recover all anti-freeze that comes out of the tools and hoses and store in an approved container. ALWAYS re-use and re-cycle anti-freeze.

7. Prime the chemical injection system with a 100% glycol based antifreeze. Insert the chemical inlet and prime tube into the anti-freeze container. Turn the chemical valve to **PRIME** until anti-freeze comes out of the prime hose. Turn the chemical valve to the **ON** (chemical) position. Ensure that the flow meter indicates flow. Ensure that all anti-freeze that comes out of the chemical hose goes into an approved container.

After **25 seconds**, turn the chemical valve to the **OFF** position.

8. Adjust the temperature control valve to the cold water position. Allow the unit to run for at least **3 minutes**. The unit is now winterized.

REMOVING ANTI-FREEZE FROM THE UNIT:

1. Connect the solution hoses to the unit, with a tool attached to the opposite end. Start the unit. Turn the water pump on. Open the tool valve and ensure that the anti-freeze goes into an approved container. Allow the anti-freeze to flow into the container until the low-pressure switch shuts the unit down.

2. Fill the water box with fresh water and repeat step 1.

3. Connect the water inlet hose to the unit and turn the water supply on. Connect all tools and solution hoses that were winterized to the solution outlet connections.

Open all tool valves and drain the anti-freeze into an approved container until the water runs clear and all of the anti-freeze is purged from the hoses and tools.

4. Insert the chemical prime hose into the approved container. Submerge the chemical hose into fresh water. Turn the chemical valve to the **PRIME** position until the water runs clear through the prime hose. Remove the prime hose from the container.

5. Turn the chemical valve to the **ON** (chemical) position. This will allow water to flow to the other side of the system.

After all of the anti-freeze has been removed, the unit is ready to operate.

The anti-freeze in your approved storage container will eventually become diluted with water. When the anti-freeze level drops below 70% of the total mixture, properly dispose of it and start over with fresh 100% anti-freeze.

WARNING!

DO NOT drain used anti-freeze on the ground or into storm drains.
Dispose of anti-freeze only in an approved location. Observe Local, State and Federal laws when disposing of anti-freeze.

SECTION 4:
SERVICE & MAINTENANCE

6. MAINTENANCE

Maintenance Chart	29
Engine	30
Vacuum Pump	31
Water Pump	31
Vacuum Inlet Filter	32
Drive Belts, Pulleys and Hubs	32
Water Box / Water Pump Inlet Filter	32
Strainer Basket	32
Y-Strainer (Outlet)	33
Check Valve (Outlet)	33
Chemical Pump, Chemical Metering System	33
Stainless Steel Accumulator	33
Pressure Regulator	33
Vacuum Hoses	33
Battery	33
High Pressure Solution Hoses	34

7. GENERAL SERVICE ADJUSTMENTS

Engine	34
Vacuum Relief Valve	34
Vacuum Pump Drive Belts	34
Water Pump Drive Belt	34
Float Valve	35
Solution Outlet Check Valve	35
Chemical Pump	35
Packing Nut Adjustment, Chemical Metering & Selector Valves	36
Pressure Regulator	36
Adding/Draining Engine Coolant	37

8. TROUBLESHOOTING

Water Pump	38
Chemical System	39
Blower / Vacuum Pump	40
Engine Will Not Start	41
Engine Does Not Crank	42
System Safety Shut Down	43
Operates At Idle Only	44
Heating System	45

MAINTENANCE CHART		
Engine	Daily	Check engine oil level.** Fill to proper level.
Engine Coolant	Daily	Check coolant level in overflow bottle. Fill to proper level.
Vacuum Pump	Daily	Spray WD-40 (or Equivalent) into the lubrication cup for 5 seconds.
Water Pump	Daily	Check water pump oil level.*** Fill to proper level.
Vacuum Inlet Filter	Daily*	Inspect filter, clean and or replace if required.
Waste Tank Strainer Basket	Daily	Empty and clean stainless steel basket.
Vacuum Hoses	Daily	Rinse with fresh water.
Waste Pump-Out (Optional)	Daily*	Inspect and remove any debris or sediment.
Engine	Weekly	Check air cleaner for damaged, dirty, or loose parts.
Engine	Weekly	Inspect air intake and cooling areas. Clean if required.
Vacuum Pump	Weekly*	Check vacuum pump oil level. Fill to proper level. **Do not overfill.**
Vacuum Inlet Filter	Weekly	Remove filter and clean.
Water Box	Weekly*	Inspect and clean filter. Replace if damaged.
Battery	Weekly*	Check fluid level. Fill with distilled water only. **Do not overfill**.
Engine	Monthly	Inspect drive belts for wear. Replace as needed.
Water Box	Monthly	Check float valve for proper operation.
Y-Strainer	Monthly*	Clean and remove any debris.****
High Pressure Solution Hoses	25 Hours	Inspect for wear, damage, or impending rupture. **Replace if damaged**.
Engine	100 Hours	Change engine oil and filter.
Vacuum Pump	100 Hours	Grease bearings with extreme pressure bearing grease.
Pressure Regulator	100 Hours	Lubricate o-rings. Use only o-ring lubricant part # 13-003.
Battery	100 Hours	Clean battery terminals.
Engine	200 Hours	Check spark plugs and clean if necessary.
Engine	200 Hours	Clean engine air filter.
Chemical Metering System	200 Hours	Inspect packing nut on selector and metering valve. Adjust as needed.
Engine	500 Hours	Change engine coolant.
Engine	500 Hours	Replace in-line fuel filter.******
Water Pump	500 Hours	Change crankcase oil.***
Pulleys and Hubs	500 Hours	Check pulley and hub set screws for proper torque.*****
Stainless Steel Accumulator	500 Hours	Check pressure. Recharge and change bladder if needed.******
Engine	1000 Hours	Replace spark plugs.
Vacuum Pump	1000 Hours	Drain, flush, and replace oil.*******
Chemical Pump	1000 Hours	Change diaphragm and check valves. Inspect disk.
Check Valve	1000 Hours	Check Teflon seat for abnormal wear or debris. Replace as needed.
Engine	2000 Hours	Replace air filter element.

To maximize the operating life and performance, use only recommended oils, filters and greases.

*Or as often as required.
Change engine oil and oil filter after **first 50 hours of operation.
***Change water pump crankcase oil after **first 50 hours** of operation
****Inspect after **first week** of operation, and remove any debris present. Inspect again after **2 to 4 weeks**.
*****Check pulley and hub set screws after **first 50 hours** of operation, and again at **100 hours** of operation.
******Or every **6 Months**. Whichever comes first.
*******Or **Yearly**. Whichever comes first.

6. MAINTENANCE

This section of the operator's manual contains the service and maintenance information for the **BLUEWAVE®** unit. A planned preventative maintenance program will ensure that your **BLUE**LINE **BLUEWAVE®** has optimum performance, long operating life, and a minimum amount of down time.

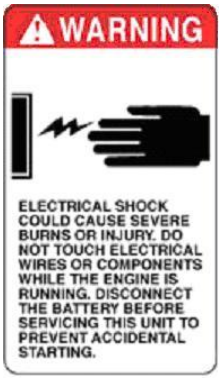

⚠ WARNING!

DO NOT attempt to service this unit while it is running. High speed parts as well as high temperature components may result in severe injury, severed limbs, or fatality.

NOTE: Refer to the hour meter as a guide for coordinating a maintenance schedule.

ENGINE

The **BLUE**LINE **BLUEWAVE®** unit features a computerized electronic fuel system. **DO NOT** attempt to service or repair this system without authorization from the factory.

1. Check the engine oil level daily. Ensure that the proper oil level is maintained. **NEVER** overfill.

2. Change the oil after the first **50 hours** of operation, after the "break-in" period. Thereafter, change oil every **100 hours** of operation.
USE ONLY KOBOTA BRAND OIL FILTERS. USE OF ANY OTHER TYPE OF OIL FILTER WILL VOID ENGINE WARRANTY.

Oil Recommendation. Use only high quality detergent oil of at least API (American Petroleum Institute) service class SH. Determine the viscosity based on the air temperature at the time of operation as outlined in the following table.

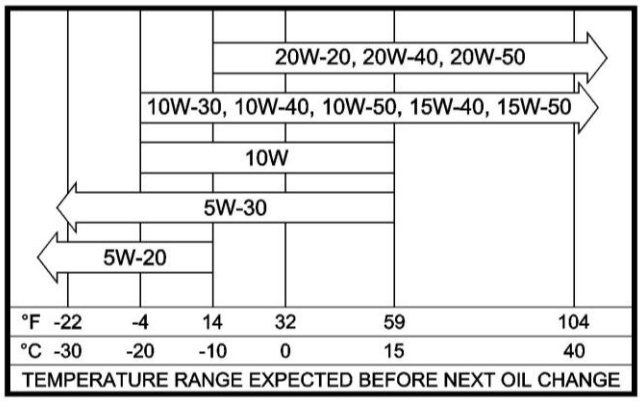

NOTE: The use of less than service class SH oil or extending the oil change intervals longer than recommended can result in engine damage.

3. Check the spark plugs every **200 hours** and clean if necessary. Replace spark plugs every **1000 hours. NEVER** sandblast spark plugs. Spark plugs should be cleaned only by scraping or wire brushing.

4. Clean the engine air filter element every **200 hours.** Replace the element every **2000 hours.**

5. Check the coolant level in the radiator overflow bottle **daily**. If no coolant is present, remove the radiator cap and add coolant. Change the coolant every 5**00 hours** with a 50:50 coolant to water ratio.

Replace the in-line fuel filter **yearly.**

NOTE: Additional engine service information can be obtained from the provided Kubota Operation and Maintenance manual. If service or repair is required, contact an authorized Kubota Service Center. They will require the serial number of the engine.

VACUUM PUMP

NOTE: Refer to the provided Vacuum Pump Operation and Service Manual for specific instructions.

Lubrication: BLUELINE recommends that you use only AEON PD Synthetic Blower Lubricant in both sides of the vacuum pump for all operating temperatures. AEON PD is formulated specifically for positive displacement blower service to provide maximum blower protection at any temperature. One filling of AEON PD will last a minimum of twice as long as a premium mineral oil.

NOTE: AEON PD (Part # 13-004) is the only oil that **BLUE**LINE puts in the vacuum pump at the factory. Adding petroleum oil to synthetic oil is **NOT** recommended.

1. Check the oil level **weekly** on both sides to ensure they are at the proper level. Too little oil will damage and ruin the bearings and gears. Too much oil will result in overheating.

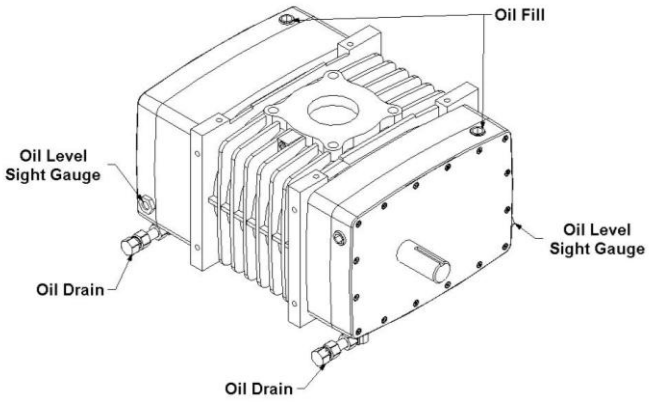

2. A lubrication cup has been provided at the front of the console, to prevent rust from building up inside of the vacuum pump.

Run the unit for at least **2 minutes** to remove any moisture from the vacuum pump. Then, spray WD-40 (or Equivalent) into the lubrication cup for **5 seconds** while the unit is running and the vacuum inlet ports are sealed. This procedure should be done at the end of **every working day**.

3. Drain, flush and replace the oil every **1000 hours or yearly, whichever comes first.**

NOTE: Two drain lines Arre proved on your blower. Ensure that both sides of the vacuum pump are filled to their proper level when servicing.

WATER PUMP

Refer to the provided Water Pump Operation Manual for specific instructions.

1. Check the crankcase oil level **daily** to ensure the proper level. If the level has dropped, check for the source of leakage and repair.

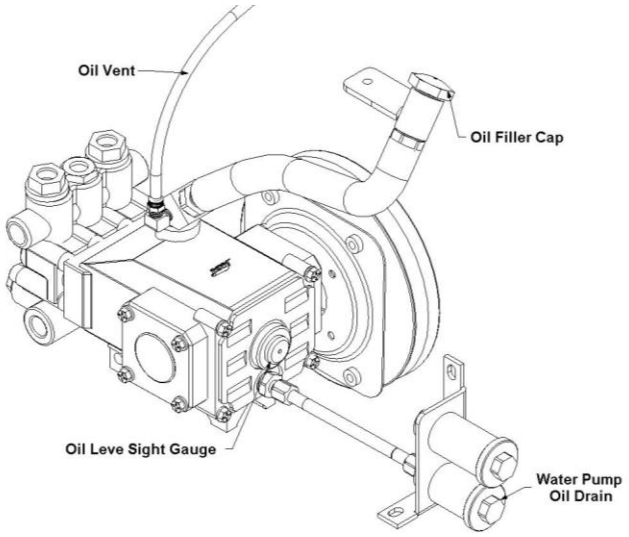

2. After the first **50 hours** of operation, change the crankcase oil with CAT Pump Crankcase Oil, (Part # 13-000). Change the crankcase oil every **500 hours** thereafter.

VACUUM INLET FILTER

1. The vacuum inlet filter in the waste tank should be inspected **daily**, and removed and cleaned **weekly.** The filter will last for a long period of time if this is done.

2. Inspect the vacuum filter inside the waste tank. Remove and clean filter if there is any lint or debris present.

CAUTION!

When removing the vacuum inlet filter, grip the plastic hexagon section of the filter. Grasping filter by the screen will damage or destroy the filter.

DRIVE BELTS, PULLEYS & HUBS

1. Check pulley set screws and hub screws after the first **50 hours** of operation and again at **100 hours.** Re-torque these screws with a torque wrench. Follow the torque values on the following table.

Check pulley set screws and hub screws every **500 hours** thereafter.

CAUTION!

Ensure that when you re-torque the screws, you use a clockwise pattern and continue until the proper torque is achieved.

TORQUE VALUES		
Component	**Inch/lbs**	**Foot/lbs**
Engine Hub	324	27
Vacuum Pump Hub	192	16

2. The **BLUEWAVE®** unit features an Adjustable Belt Tensioning system. This system eliminates the need for sliding the vacuum pump to achieve the proper belt tension. However, belts and pulleys should be checked periodically for wear. They should also be cleaned and inspected regularly. If wear or glazing is discovered, replacement is recommended.

WATER BOX

1. The float valve should be checked at least **monthly** for proper operation. If overfilling is noted, check the plunger for proper seating. Also, check the float rod for proper adjustment.

2. The filter on the bottom of the inside of the water box is produced out of rubber with a stainless steel screen. This filter should be inspected and cleaned on a **weekly** basis, and replaced, if damaged.

NOTE: Prior to removing strainer, vacuum all excess water and debris from water box.

WASTE TANK STRAINER BASKET

The strainer basket located in the waste tank should be emptied and cleaned on a **daily** basis.

Y-STRAINER (OUTLET)

Unscrew the screen and inspect the Y-strainer after the first **week** of operation. Remove any debris present. Inspect again after **2** and **4 weeks.** Thereafter, inspect the Y-strainer and screen at least **monthly**. If a frequent build-up of debris is noticed, inspect and clean more frequently.

CHECK VALVE (OUTLET)

Inspect the check valve when servicing the chemical pump or as needed. Remove the check valve from the Y-strainer assembly and disassemble. Check the Teflon seat for abnormal wear or debris. Replace the Teflon seat if necessary. Improper seating of the check valve poppet, damaged spring, or o-rings will result in poor operation of the chemical system.

CHEMICAL PUMP

The chemical pump should be rebuilt every **1000 hours.** This involves changing the diaphragm, check valves, and inspecting the disk.

CHEMICAL METERING SYSTEM

Check and inspect the packing nut on the chemical selector and metering valves every **200 hours.** Keeping the valve packings properly adjusted will prevent leaks and add to the overall life of the valves.

STAINLESS STEEL ACCUMULATOR

Sealed 250 pound nitrogen accumulator. Change every 2000 hours or as needed.

PRESSURE REGULATOR

Lubricate the o-rings in the pressure regulator every **100 hours.** Use only o-ring lubricant (Part # 13-003).

VACUUM HOSES

To ensure maximum hose life, **BLUE**LINE recommends that you wash out the hoses with fresh water **daily.**

BATTERY

⚠ WARNING!

Explosive gases, Dangerous acid!
Batteries contain sulfuric acid. To prevent acid burns, avoid contact with skin, eyes and clothing. Batteries also produce explosive hydrogen gases while charging. To prevent fire or explosion, charge batteries only in a well ventilated area. Keep sparks, open flames, as well as any other sources of ignition away from batteries at all times. Remove all jewelry prior to servicing batteries. Keep batteries out of the reach of children.

Before disconnecting the negative (-) ground cable, ensure that all switches are in the OFF position. If ON, a spark could occur at the ground connection terminal, which could cause an explosion if hydrogen gas or gasoline vapors are present. ALWAYS disconnect the negative (-) terminal first.

1. Check the fluid level in the battery at least **once a week.** If low, fill to the recommended level **ONLY** with distilled water. **DO NOT** overfill the battery. Early failure or poor performance will result due to loss of electrolyte.

2. Keep cables, terminals and external surfaces of the battery clean and dry. A buildup of corrosive

acid or grime on the external surfaces could cause the battery to self-discharge.

3. Battery terminals should be cleaned every **100 hours** to prevent corrosion buildup. Wash the cables, terminals and external surfaces with a mild baking soda and water solution. Rinse thoroughly with fresh water. **DO NOT** allow baking soda to enter the battery cells, as this will destroy the electrolyte, resulting in battery failure.

HIGH PRESSURE SOLUTION HOSES

Inspect your high-pressure solution hoses for wear after the first **100 hours.** Thereafter, inspect every **25 hours.** If the hoses show any signs of damage or impending rupture, replace the hoses.

⚠ WARNING!

NEVER attempt to repair high-pressure solution hoses. Repairing high-pressure solution hoses may result in severe burns and serious injury.

All high-pressure solution hoses must be rated for 3000 PSI at 250 deg. F. Thermoplastic hoses do not meet this requirement and should not be used. Severe burns and injury may result if the hoses do not meet these requirements.

7. GENERAL SERVICE ADJUSTMENTS

⚠ WARNING!

DO NOT attempt to service this unit while it is running. High speed parts as well as high temperature components may result in severe injury, severed limbs, or fatality.

ENGINE

The **BLUE**LINE **BLUEWAVE®** unit features a computerized fuel system. **DO NOT** attempt to service or repair this system without authorization from the factory.

VACUUM RELIEF VALVE

With the unit running at full RPM, block off the airflow at the vacuum inlet ports and read the vacuum gauge. If adjustment is required, shut the unit down and adjust the locking nut tension on the vacuum relief valve. Re-start the unit and read the vacuum gauge. Repeat this process until the vacuum relief valve opens at 13” Hg.

VACUUM PUMP DRIVE BELTS

The **BLUEWAVE®** unit is equipped with an Adjustable Belt Tensioning system. This eliminates the need for sliding the vacuum pump for belt adjustment. Periodic checking of the belts and pulley condition is all that is required.

WATER PUMP DRIVE BELT

To tighten the water pump belt:

1. Loosen the four nuts, which hold the water pump base to the frame.

2. Adjust the position of the belt tensioning adjusting bolt until the proper belt tension is achieved. (3/4" deflection in the center of the belts, half way between the pulleys).

3. While checking the alignment, tighten the nuts that hold the water pump to the base.

FLOAT VALVE (WATER BOX)

The float valve should only be adjusted if the water box is overflowing or the water level in the water box is low.

1. If the water box is overflowing, remove and check the float valve for damage, or debris. If the float ball has any water inside of it, it must be replaced.

CAUTION!

IF replacing the float ball, DO NOT over-tighten the float rod, as it can puncture the ball. Ensure that the nuts are tightened on the rod.

SOLUTION OUTLET CHECK VALVE

Inspect the check valve whenever performing service on the chemical pump or if flow problems are occurring in the chemical system.

1. Remove the check valve, ensuring that the small o-ring on the seat comes out with it

2. Next, remove the seat using a 5/16 in. Allen wrench

3. Check the Teflon seat for wear or debris. Clean and replace the seat if necessary.

4. Inspect the poppet and the spring for wear or damage. Clean and replace as necessary.

5. Re-assemble the check valve. Thread the seat by hand until snug. Then tighten with a 5/16 in Allen wrench. **DO NOT** over-tighten.

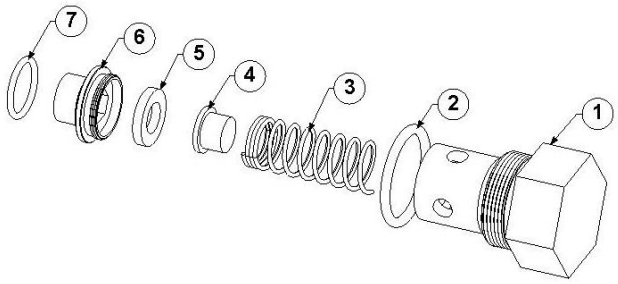

23-023 VLV, CHECK, CHECK VLV MANIFOLD

Item #	Part Number	Qty.	Description
1	27-009	1	CAP, CHECK VALVE ASSY. SS
2	41-007	1	ORING, 7/8 ID X 1-1/16 OD
3	15-007	1	SPRING, CHECK VALVE ASSY.
4	27-010	1	POPPET, CHECK VALVE ASSY
5	27-004	1	INSERT, SEAT-CHK VLV ASSY TM
6	27-011	1	SEAT, CHECK VALVE ASSY.
7	41-008	1	ORING, ½ ID 5/8 OD

Note: Improper seating of the check valve seat, poppet, damaged spring or o-rings will result in poor performance of the chemical system.

6. Lubricate the o-rings with o-ring lubricant. (Part # 13-003) and re-install.

CHEMICAL PUMP

The **BLUEWAVE**® unit features a stainless steel chemical pump and metering system. The chemical pump requires only the replacement of the diaphragm and check valves. To replace the diaphragm, unscrew the cover from the body. When replacing the diaphragm, lube the outer edges of the diaphragm with o-ring lubricant (Part #13-003) and reassemble.

To replace the check valves, remove the check valve caps, replace the check valves and

reassemble using new o-rings. **DO NOT** attempt to reuse o-rings after the check valves have been removed.

PACKING NUT ADJUSTMENT CHEMICAL METERING/SELECTOR VALVES

Inspect the packing nut for proper tension on the chemical metering and chemical selector valves every **200 hours.** When turning the knob, there should be some resistance. If not, slightly tighten the packing nut. **DO NOT** over-tighten. Keeping the packing properly adjusted will eliminate possible leaks and will add to the overall life of the valves.

Chemical Prime Valve

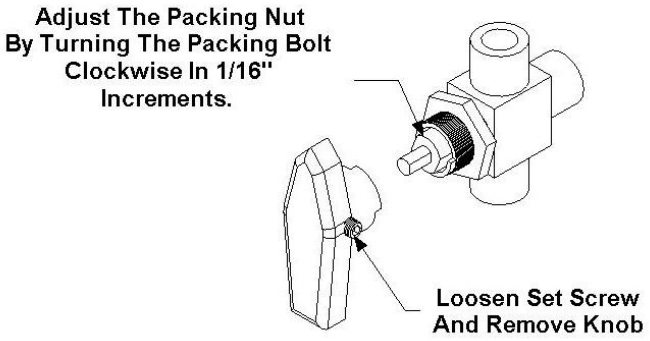

Chemical Metering Valve

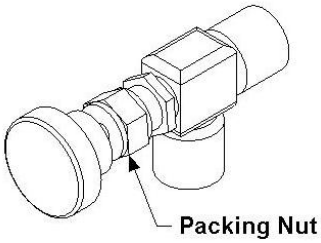

PRESSURE REGULATOR

The pressure regulator holds water pressure at a preset point and bypasses this water back to the water box.

To adjust:

1. With the unit running, close the cleaning tool valve. Check the pressure gauge. Open the tool valve. Set the pressure regulator so that the pressure gauge reads 350 PSI with the tool valve open.

With the tool valve open, there should be a normal drop of approximately 100-PSI, in pressure. **If the drop is greater than 100 PSI, it may be necessary to lubricate the pressure regulator o-rings.**

2. To adjust the pressure regulator, turn the adjusting knob (while observing the pressure gauge on the control panel) until you reach the desired pressure.

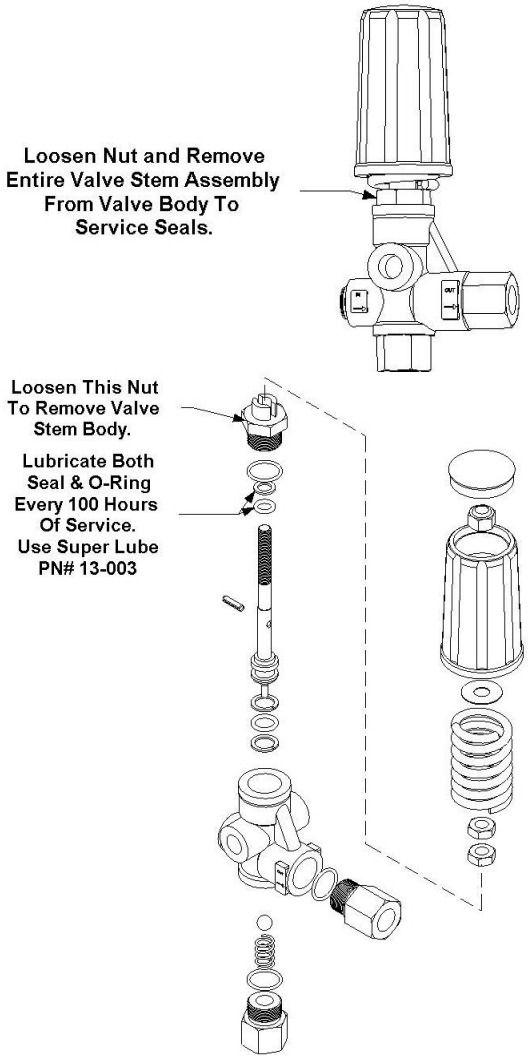

ADDING/DRAINING ENGINE COOLANT

Use a 50:50 coolant to water ratio in this unit's cooling system.

1. To drain the coolant, remove the upper radiator cap and turn the lower radiator draincock counter-clockwise. Open the draincock on the heli-coil assembly, until drained. **Dispose of anti-freeze only in an approved location**

2. To add coolant, fill the radiator, then bleed the air out of the system by turning the draincock on the heli-coil counter-clockwise. The heli-coil assembly is located on the right hand side of the console while facing the front of the unit. After bleeding the air out of the heli-coil draincock, close the draincock by turning it clockwise. Fill the engine radiator again. Next, fill the overflow container **ONLY** halfway between the "add" and "fill" marks. After running the unit, if necessary, add more coolant to the overflow container only.

8. TROUBLESHOOTING

WARNING!

DO NOT attempt to service this unit while it is running. High-speed parts as well as high temperature components may result in severe injury, severed limbs or fatality.

This section of the operator's manual describes how to look for and repair malfunctions, which may occur.

Accurate troubleshooting is based on a thorough and complete understanding of the **WATER, CHEMICAL, VACCUM, HEAT TRANSFER**, **SAFETY** and **WIRING** systems featured in this unit.

If there are malfunctions occurring on this unit which you do not understand, refer back to the **OPERATION** section of this manual and review **SYSTEM**

Water Pump

Note: Make sure the water pump has oil, the water box is full of water and the chemical system is turned off.
Depress the low pressure override switch and attempt to start unit before proceeding with diagnostics.
Note: Any time you have a water pump problem, we are actually looking for a water pump volume problem.
NOTE: WATER MAY BE HOT AND UNDER PRESSURE!! EXTREME CAUTION SHOULD BE USED!!

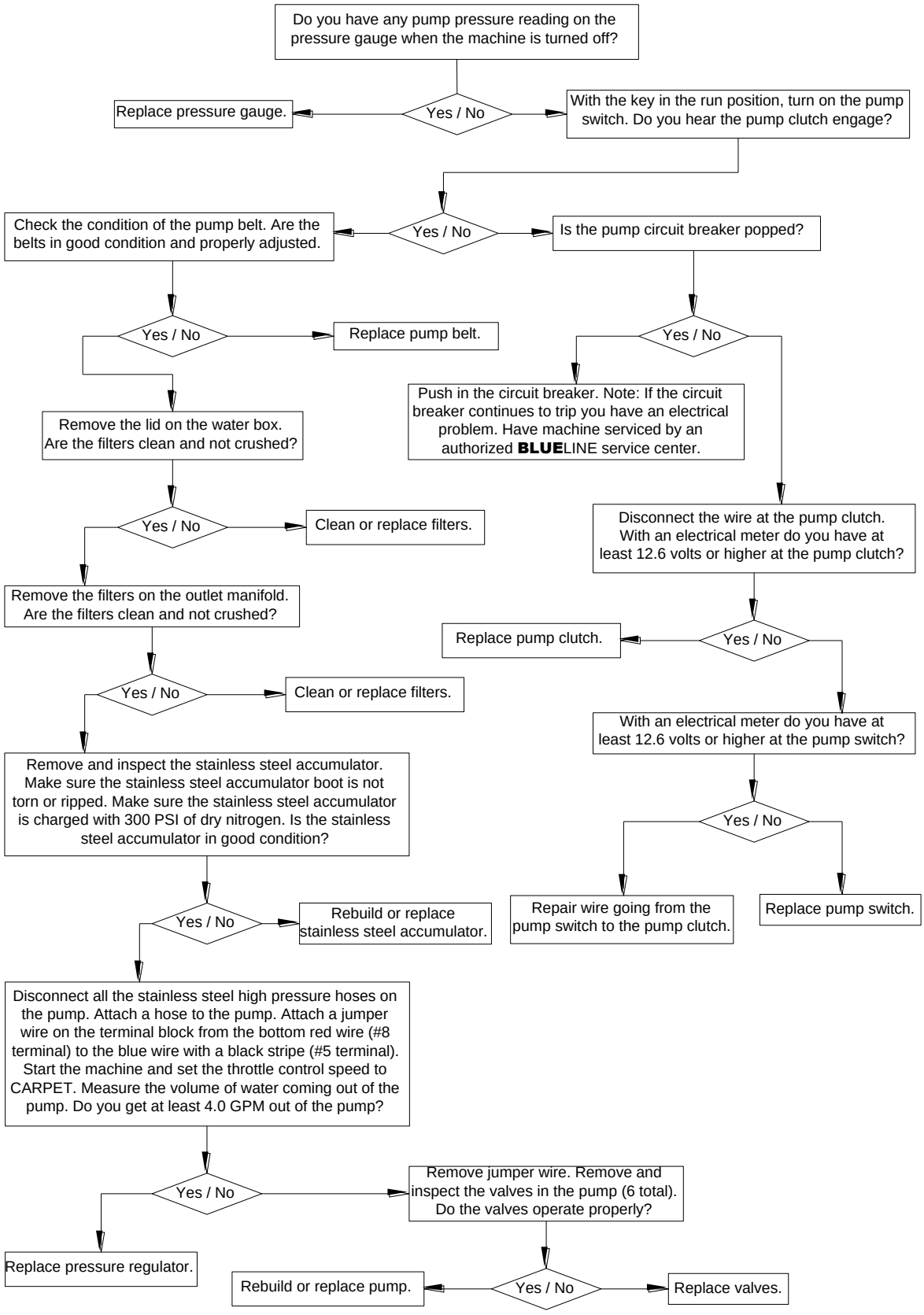

Chemical System

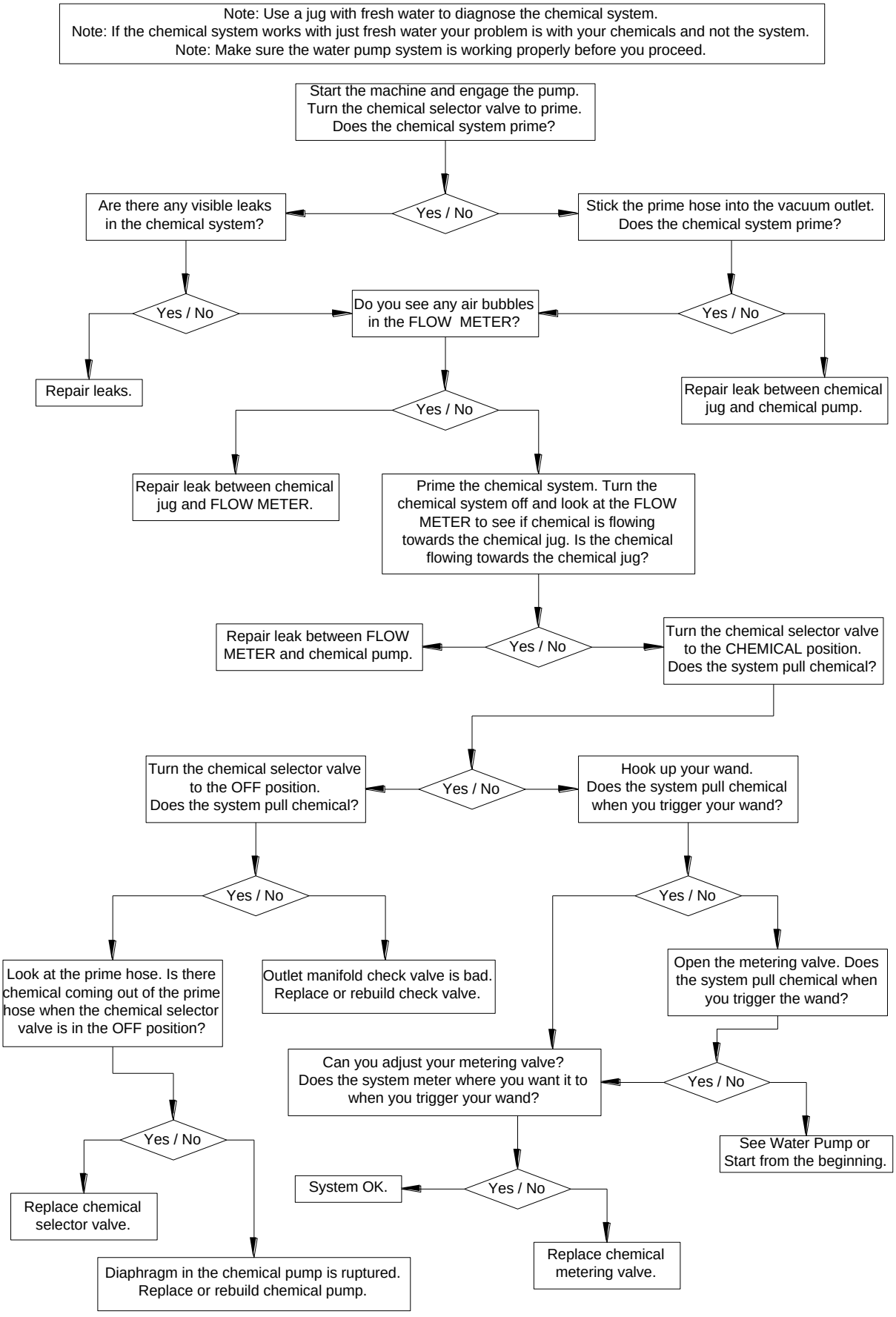

Blower / Vacuum Pump

Note: Make sure the blower has oil, the waste tank is empty and the waste tank filters are clean and not damaged.
Note: Any time you have a blower vacuum problem, we are actually looking for an air volume problem.

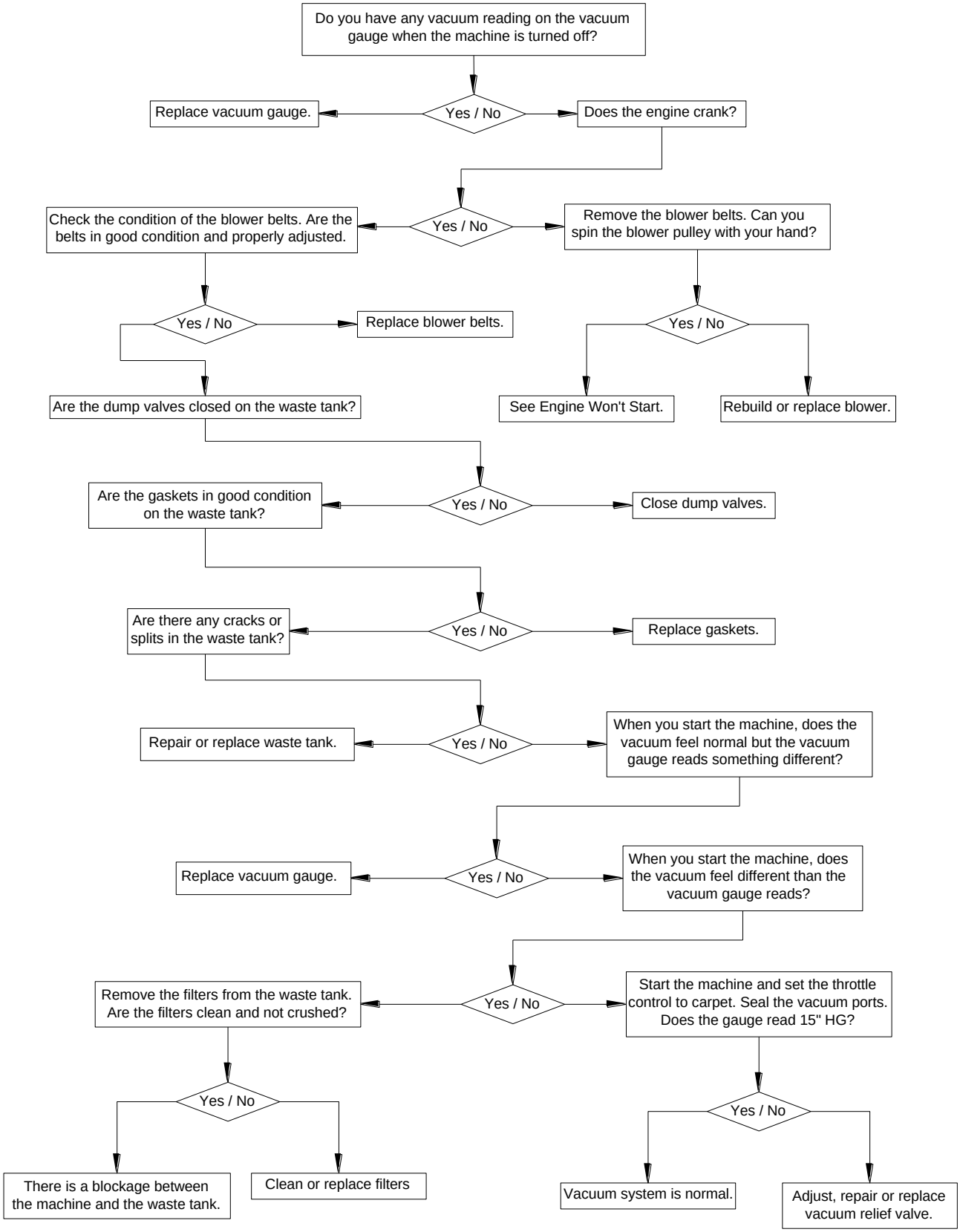

Engine Won't Start

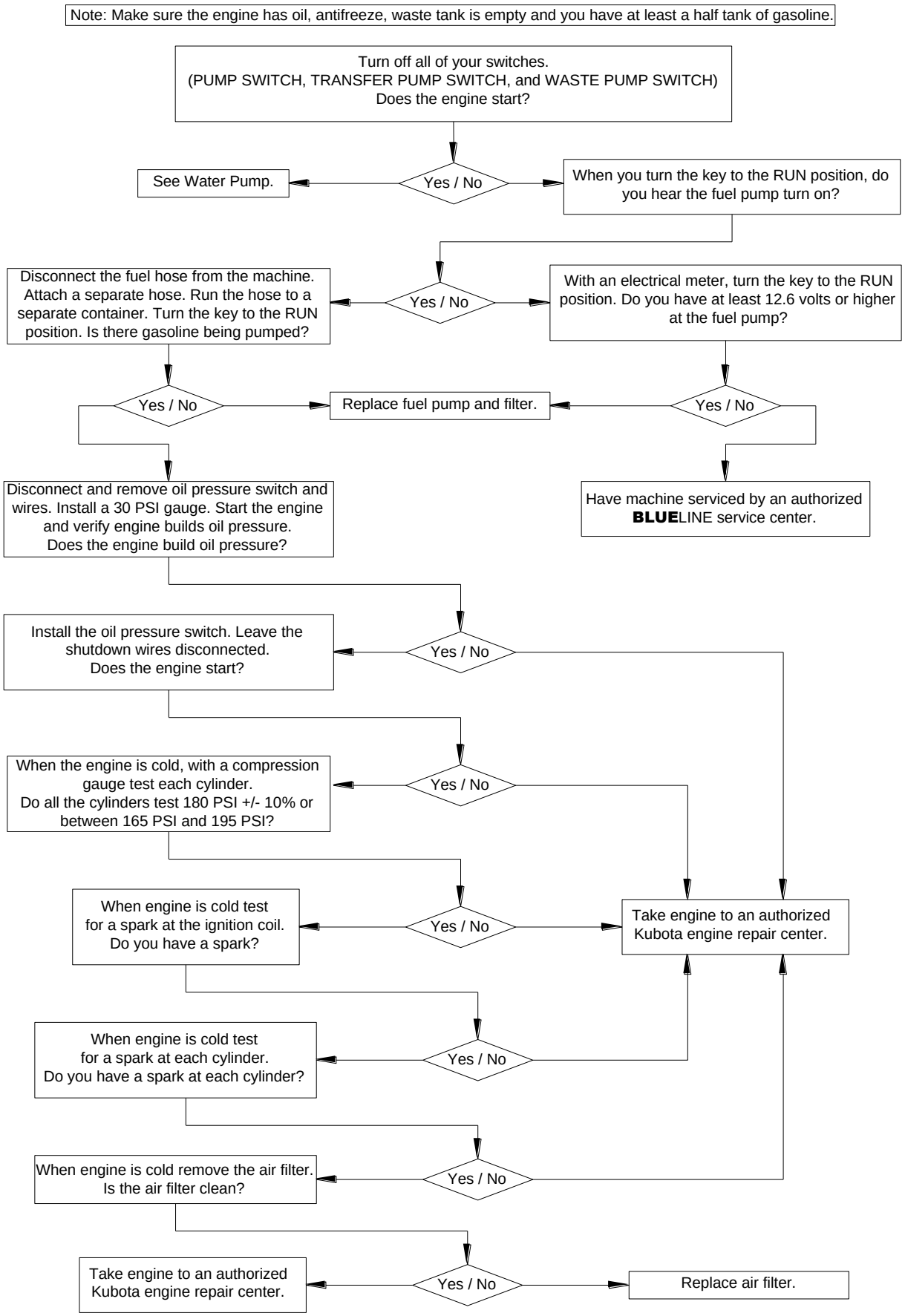

Engine Does Not Crank

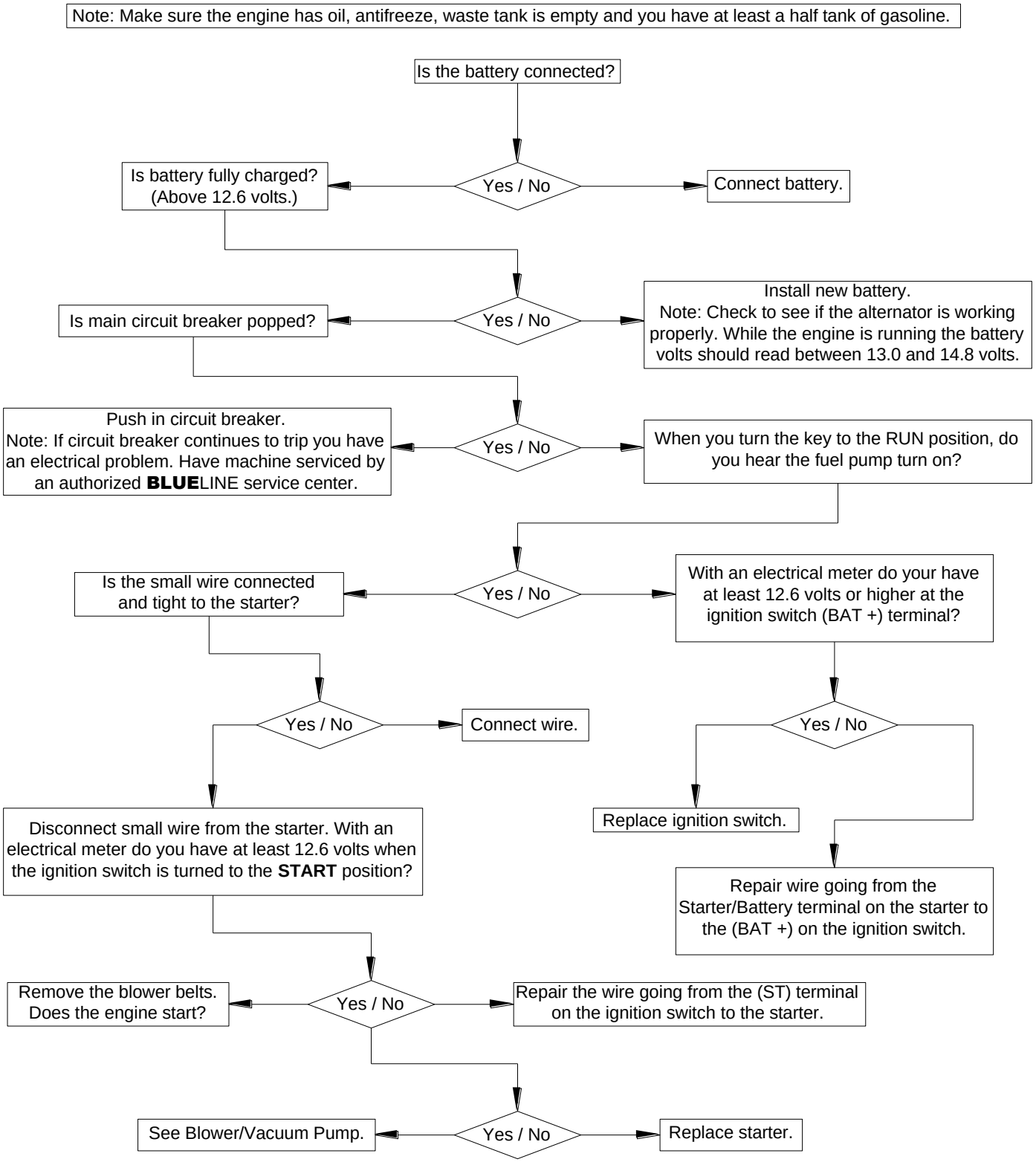

System Safety Shut Down

Note: Your BLUE WAVE console is equipped with various safety shut down systems.
If the system shuts down during operation it may be due to one of these safety shut downs.

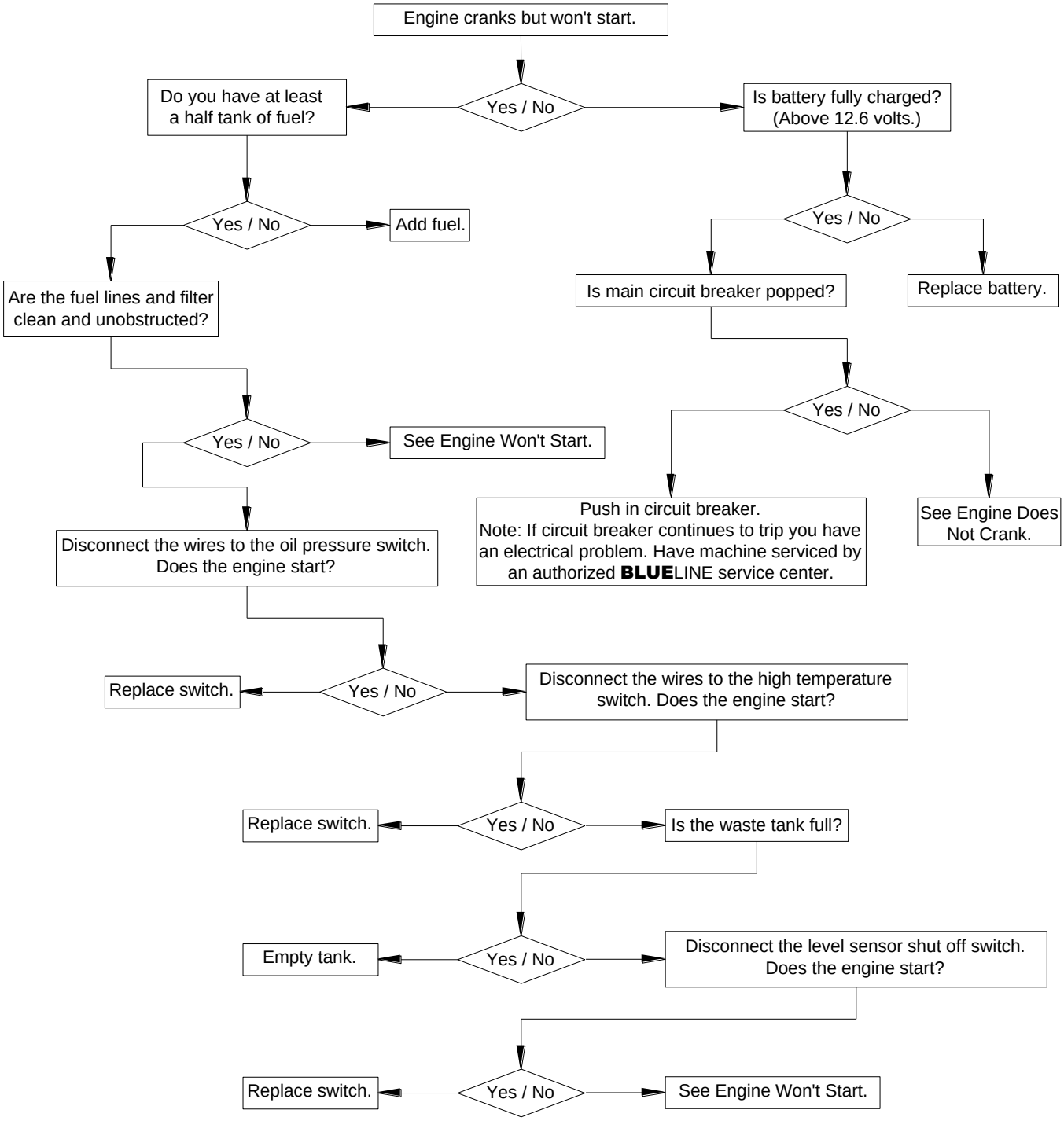

Operates At Idle Only

Note: Your BLUEWAVE console is equipped with various safety shut down systems. If the system slows to idle during operation it may be due to one of these safety systems.

Your BLUE WAVE truck mount console is equipped wit an electronic throttle control, that will only allow unit to operate at idle if one of the following conditions exist.

To much load (under speed). Over speed.	Check to see if wires and or hoses have come into contact with throttle linkage. Inspect linkage for damage. Remove obstructions or repair linkage. Shut down unit and restart.
Low incoming voltage.	Verify that the system is operating with a minimum of 12.6 volts. Repair and or replace battery, alternator or other electrical components as required. Shut down unit and restart.

Note: If conditions persist have unit serviced by an authorized **BLUE**LINE service center.

Heating System

Note: Make sure the engine and water pump systems are working properly.
NOTE: WATER MAY BE HOT AND UNDER PRESSURE!! EXTREME CAUTION SHOULD BE USED!!

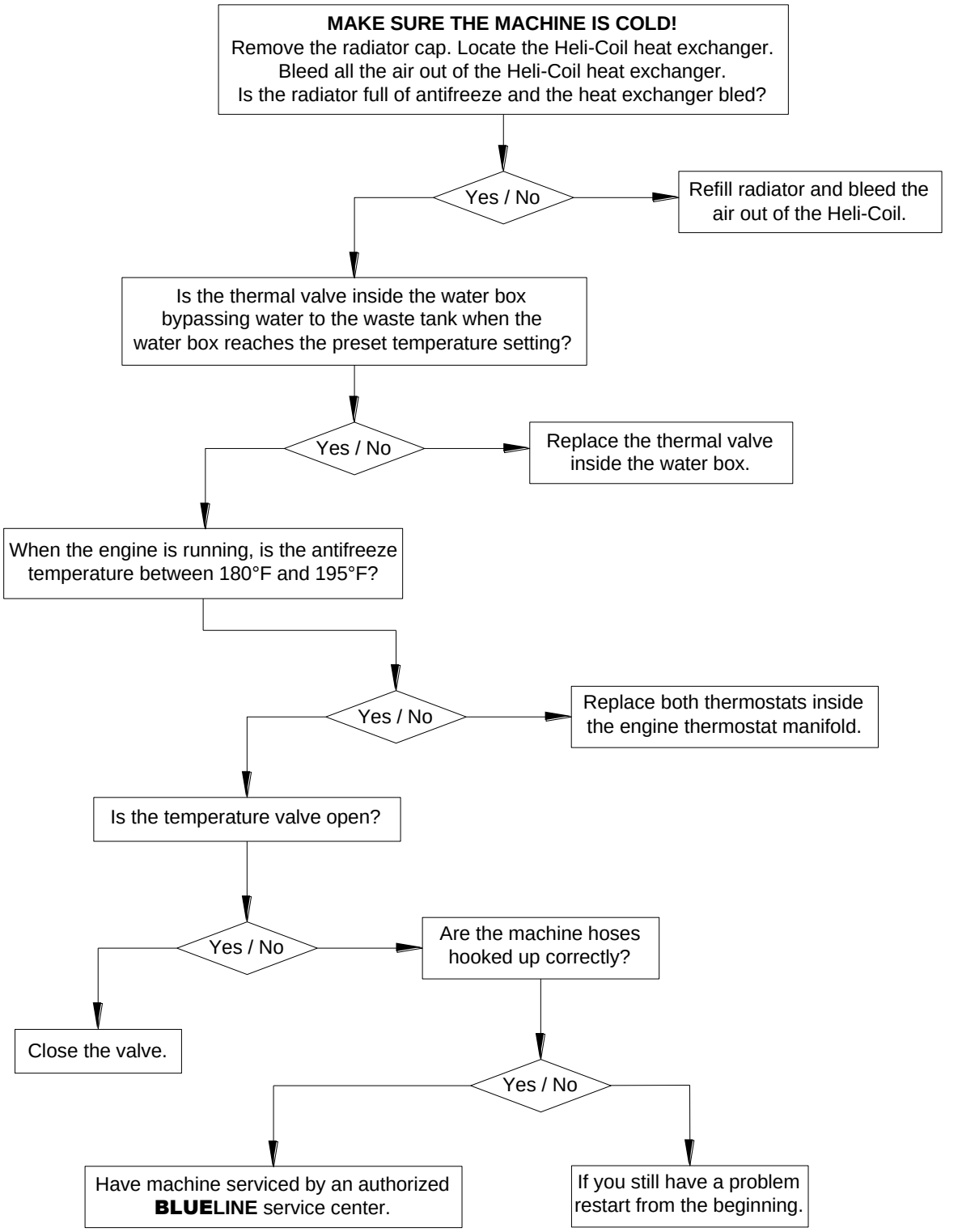

SECTION 5:
PARTS & ACCESSORIES

9. ILLUSTRATED PARTS LISTINGS

Sheet Metal	48
Engine	52
Water Transfer System	58
Vacuum-Exhaust System	65
Chemical Pumping System	69
Decals	71
Electrical Diagram	73
Optional Equipment	74

10. ACCESSORIES

Accessories	78

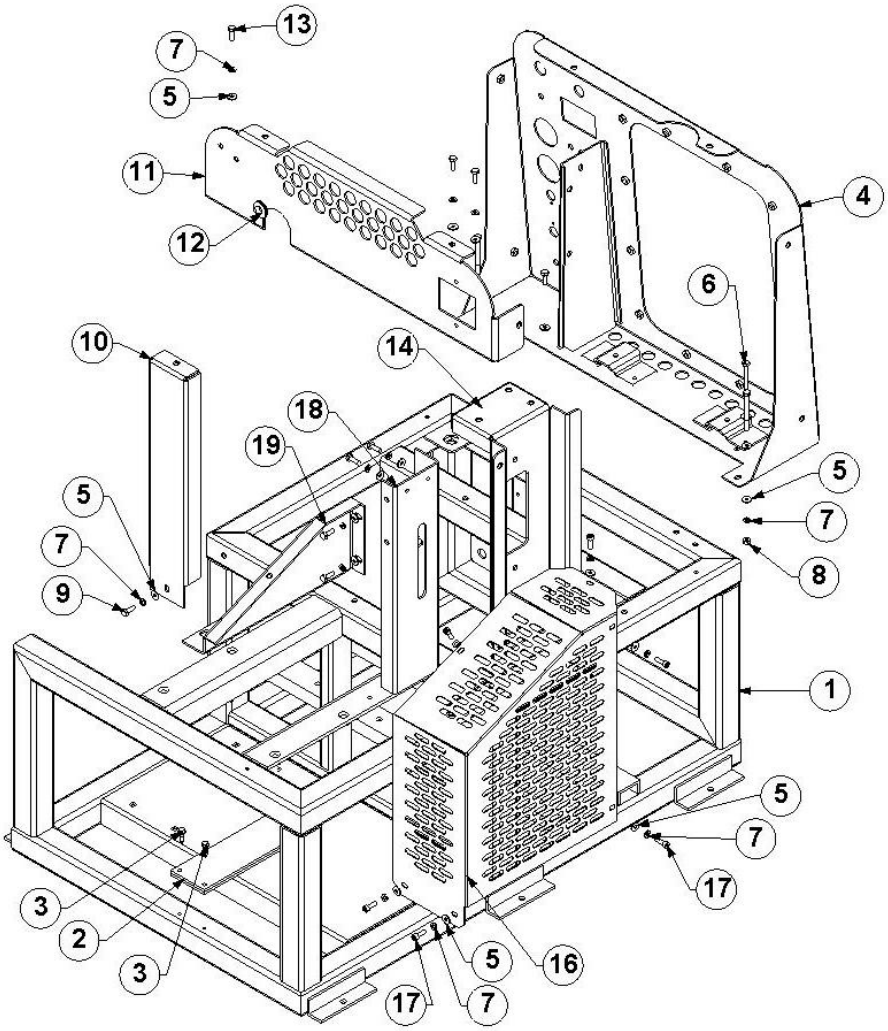

5-1

SHEET METAL FRAME

Item No.	Part Number	Qty	Description
1	61-109	1	ASSY, BASE BLUEWAVE
2	58-035	1	BRKT, COWL SUPPORT CHOMPER
3	10-035	2	SCREW, SELF TAP 1/4-20 X 1
4	61-115	1	ASSY, CONRTOL PANEL MOUNT BW
5	12-011	24	WASHER, FLAT #12 SAE
6	10-028	4	SCREW, MACH 1/4-20 X 2-3/4 HXHD
7	12-015	20	LKWSR, 1/4 ZINC
8	11-004	3	NUT, 1/4-20 ZINC
9	10-032	7	SCREW, MACH 1/4-20 X 3/4 HXHD
10	58-080	1	MOUNT, REAR PANEL SUPPORT
11	58-079	1	PANEL, UPPER REAR BLUEWAVE
12	41-019	1	GROMMET, 1-1/8 OD X 5/8 ID A 5/16
13	10-020	3	SCREW, MACH 1/4-20 X 3/4 HXHD SS
14	61-110	1	ASSY, BELT TENSIONER BLUEWAVE
15	11-013	1	LKNUT, 1/4-20 NYLOK
16	61-111	1	ASSY, BELT GUARD BLUEWAVE
17	10-021	6	SCREW, MACH 1/4-20 X 3/4 SOCHD SS
18	58-081	1	MOUNT, TUTHILL BLOWER
19	61-151	1	ASSY, SUPPORT GUARD BLOWER

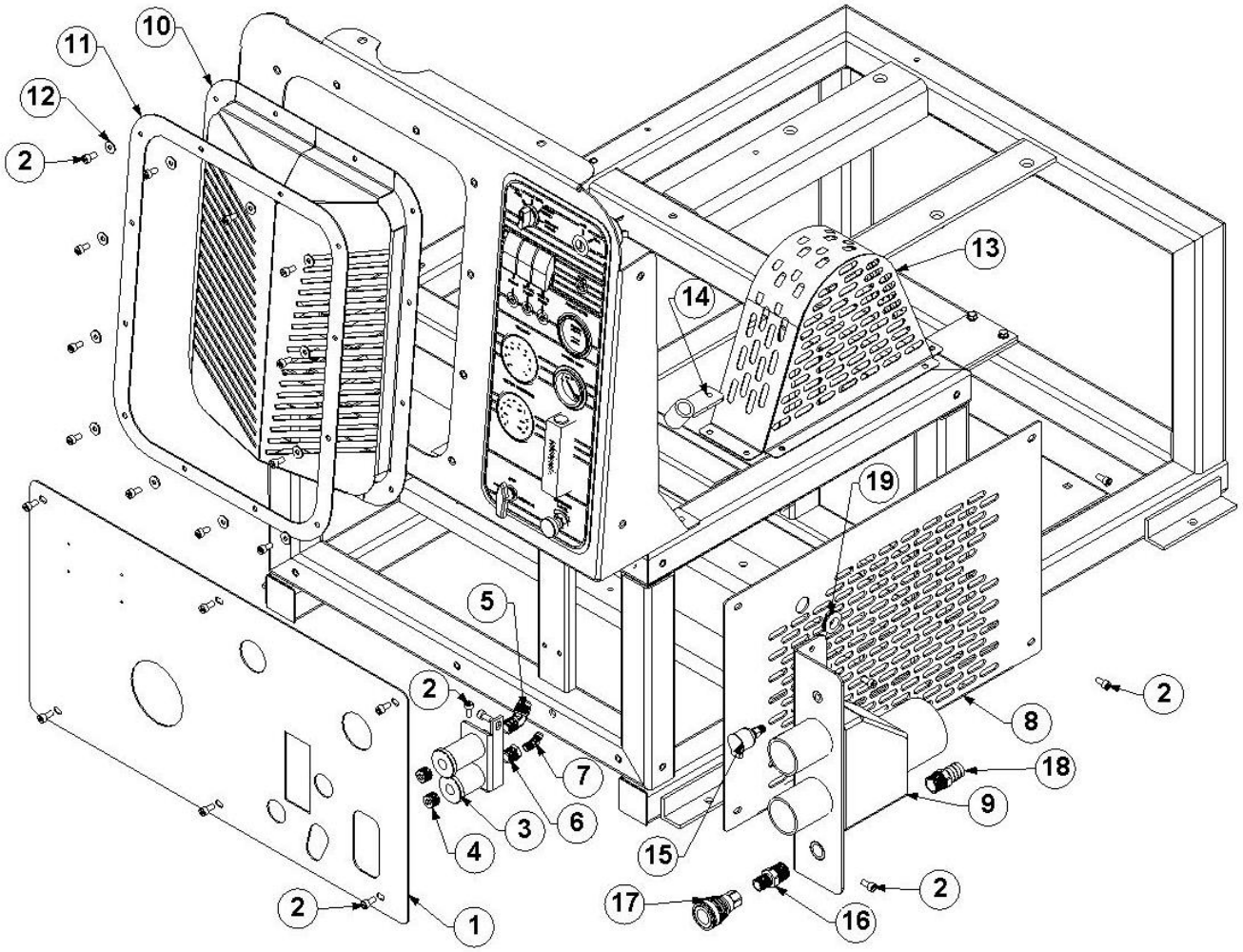

5-2

Front Sheet Metal

Item No.	Part Number	Qty	Description
1	58-083	1	PNL, LOWER FRONT BLUEWAVE
2	10-007	24	SCREW, MACH 1/4-20 X 1/2 SOCHD SS
3	61-146	1	ASSY, BRKT OIL DRAIN
4	21-146	2	PLUG, 3/8 NPT BRASS
5	21-059	1	ELL, 3/8 P X 1/2 T 45DEG BRASS
6	21-088	1	BUSHING, 3/8 X 1/4 BRASS
7	21-051	1	ELL, 1/4 P X 1/4 T 45 DEG BRASS
8	58-082	1	PANEL, LOWER RIGHT BLUEWAVE
9	61-133	1	ASSY, DUAL HOSE CONNECTION
10	59-304	1	PNL, GRILL MAIN BLUEWAVE
11	58-092	1	GRILL, RETAINER RING BLUEWAVE
12	12-011	12	WASHER, FLAT #12 SAE
13	61-143	1	ASSY, GUARD BELT WTR PMP BW
14	61-147	1	ASSY, OIL FILL CAT PUMP BW
15	28-000	1	CUP, OILFILL 1/8P
16	21-030	1	NIP, HEX 1/2 X 3/8 BRASS
17	25-005	1	DSC, 3/8X3/8FP BR
18	21-032	1	FTTG, BARB 1/2 P X 3/4 H BRASS
19	41-019	1	GROMMET, 1-1/8 OD X 5/8 ID A 5/16

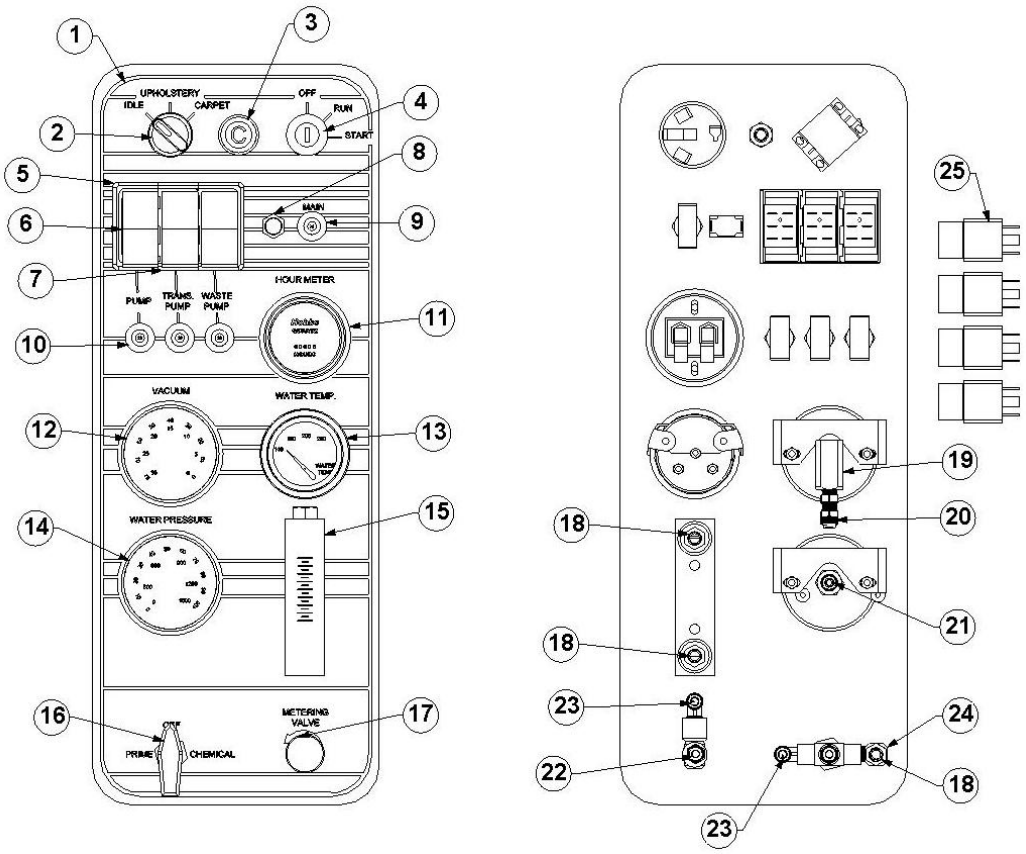

5-3

BLUEWAVE CONTROL PANEL ASSEMBLY

Item No.	Part Number	Qty	Description
1	44-021	1	DECAL, CONTROL PANEL BLUEWAVE
2	29-024	1	SWITCH, THROTTLE CONTROL 3 POS
3	40-001	1	CABLE, CHOKE
4	29-007	1	SWITCH,STARTER&KEY3POSITION
5	31-011	2	PANEL, MTG. END # 44383 WAYTEK
6	29-012	3	SWITCH, PUMP AND AUX. DSCVRY
7	31-012	1	PANEL, MTG. MIDDLE # 44384 WAYTEK
8	29-031	1	SWITCH, PUSH BUTTON OVERRIDE
9	30-007	1	BREAKER, 30 AMP
10	30-008	3	BREAKER, 20 AMP
11	26-010	1	HOURMETER, HOBBS
12	26-004	1	GUAGE, VAC 30in.HG DUALSCALE
13	26-007	1	GAUGE,WTR. TEMP 320 DEG
14	26-005	1	GAUGE, WTR. PRESS1500PSIDUAL
15	26-003	1	FLOWMETER, 1/8FP
16	23-027	1	VLV, 3-WAY BALL 1/8 FP SS
17	23-028	1	VLV, MET 1/8FP (CHEM) RT ANG SS
18	21-007	3	FTTG,BRB 1/8 PX 5/16 H BR
19	21-037	1	ELL, 1/4 IN. BRASS
20	21-028	1	CONN, 1/8 P X 1/4 POLY
21	21-004	1	21-004 CONN, 1/4 FPX 1/4 T BR
22	21-001	2	CONN, 1/8 P X 1/4 T BR
23	21-054	2	1/8 P X 1/4 T BRASS
24	21-038	1	ELL, STREET 1/8 IN. BRASS
25	34-010	4	RELAY, ENG.SHUTDWN12V20/30AMP

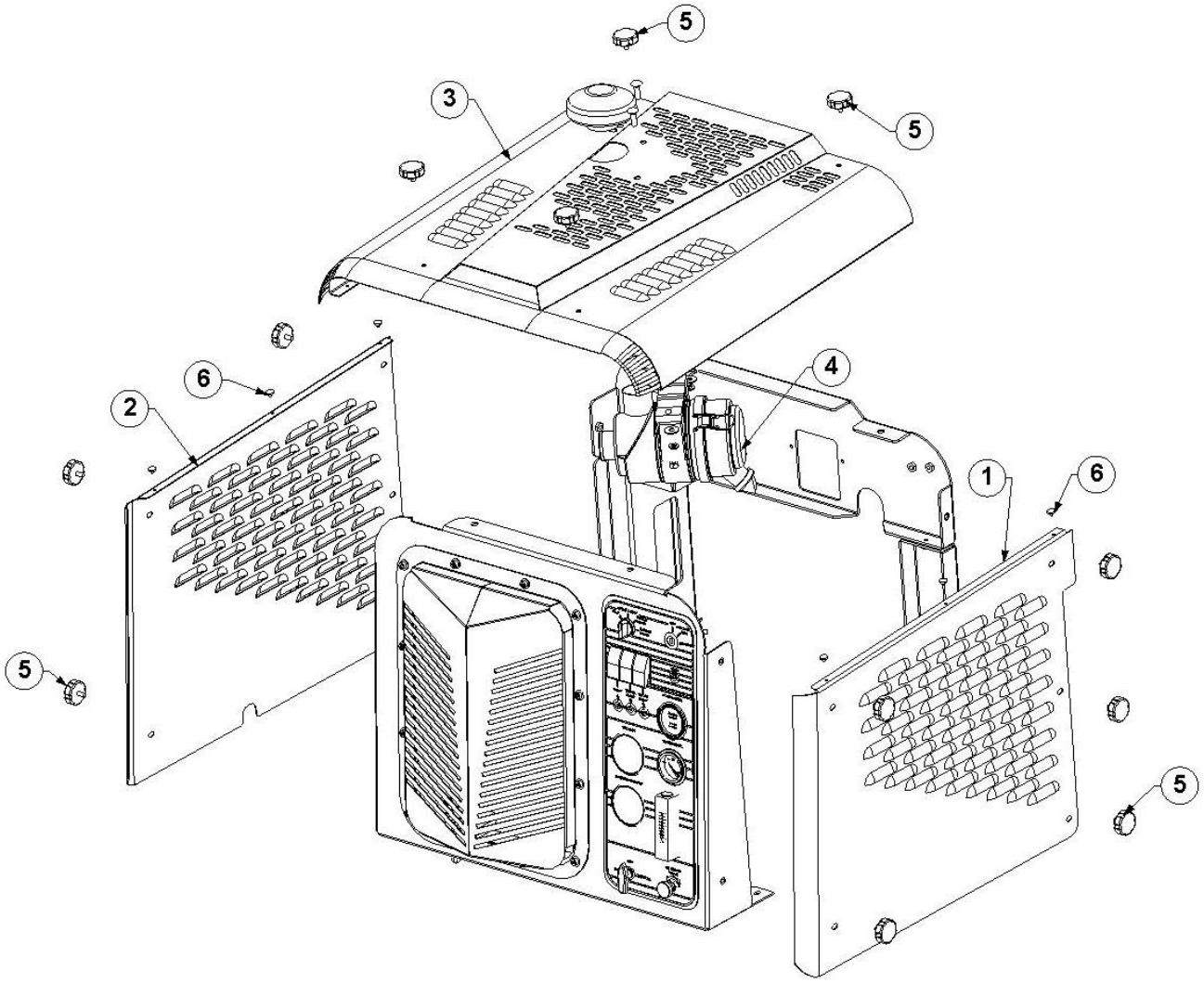

5-4

HOOD ASSEMBLY

Item No.	Part Number	Qty	Description
1	58-089	1	PNL, HOOD RIGHT BLUEWAVE
2	58-090	1	PNL, HOOD LEFT BLUEWAVE
3	61-118	1	ASSY, HOOD CTR BLUEWAVE
4		1	AIR CLEANER
5	11-007	14	NUT, THUMB 1/4-20 FKWR. HEAD KNOB
6	41-032	6	BUMPER, RUBBER HOOD BW

Oil PSI Switch: Carquest PS15

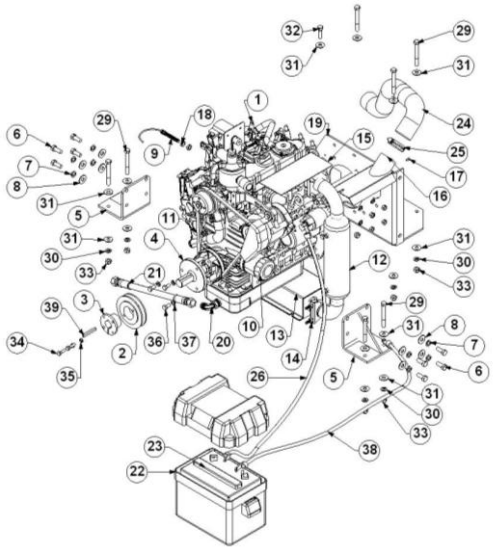

ENGINE INSTALLATION

Item No.	Part Number	Qty	Description
1	45-010	1	ENGINE KUBOTA 31 HP
2	38-020	1	PULLEY AK41H
3	38-021	1	HUB H-1
4	66-069	1	SHAFT WATER PUMP KUBOTA
5	61-122	2	ASSY MTG BRKT KUBOTA
6	10-066	8	SCREW MACH M8 10 - 1.25 X 25
7	12-024	8	LKWSR 10MM ZINC
8	12-025	8	WASHER FLAT M10
9	34-013	1	SENSOR MAGNETIC PICK-UP
10	36-173	1	FILTER OIL KUBOTA WG 972
11	37-029	1	BELT KUBOTA#15881-97010
12	61-342	1	ASSY BLUEWAVE EXHAUST ADAPTOR
13	63-088	1	MUFFLER BLUEWAVE LOWER
14	14-027	1	CLAMP MUFFLER 1-1/2 IN.
15	58-118	1	PNL HEAT SHIELD BW
16	61-167	1	ASSY MANIFOLD HEAT SHIELD
17	10-091	1	SCREW 8-32 X 1/4 SHCS
18	11-025	2	NUT 3/8-16 X 24 ZINC
19	59-281	1	PLATE KUBOTA ENGINE MOUNT
20	21-142	1	FTTG 3/8 MJIC X M12X1.5 90 DEG.
21	18-089	1	HOSE 3/8 FJIC X 1/2 FJIC SWIVEL
22	40-004	1	BOX BATTERY HOLDER
23	35-004	1	BATTERY 12 VOLT LAWN & GARDEN
24	16-049	1	HOSE CARB PRE-HEATER 2" X 36"
25	14-010	1	CLAMP HOSE #32
26	47-025	1	ASSY BATTERY CABLE RED BLUEWAVE
27	11-010	4	NUT M8 HARD
28	12-005	4	LKWSR M8 HARD
29	10-030	7	SCREW MACH 3/8-16 X 3 HXHD
30	12-014	8	LKWSR 3/8 ZINC
31	12-013	16	WASHER FLAT 3/8 SAE
32	10-004	1	SCREW MACH 3/8-16 X 1-1/4 HEXHD
33	11-019	8	NUT 3/8-16 NYLOK
34	10-026	2	SCREW MACH 1/4-20 X 1 HXHD
35	12-015	2	LKWSR 1/4 ZINC
36	10-008	3	SCREW MACH 8MM-16 X 1.25MM
37	12-016	3	LKWSR 5/16 ZINC
38	47-026	1	ASSY BATTERY CABLE BLK BLUEWAVE
39	64-005	1	KEYSTOCK 1/4 SQUARE X 2 IN

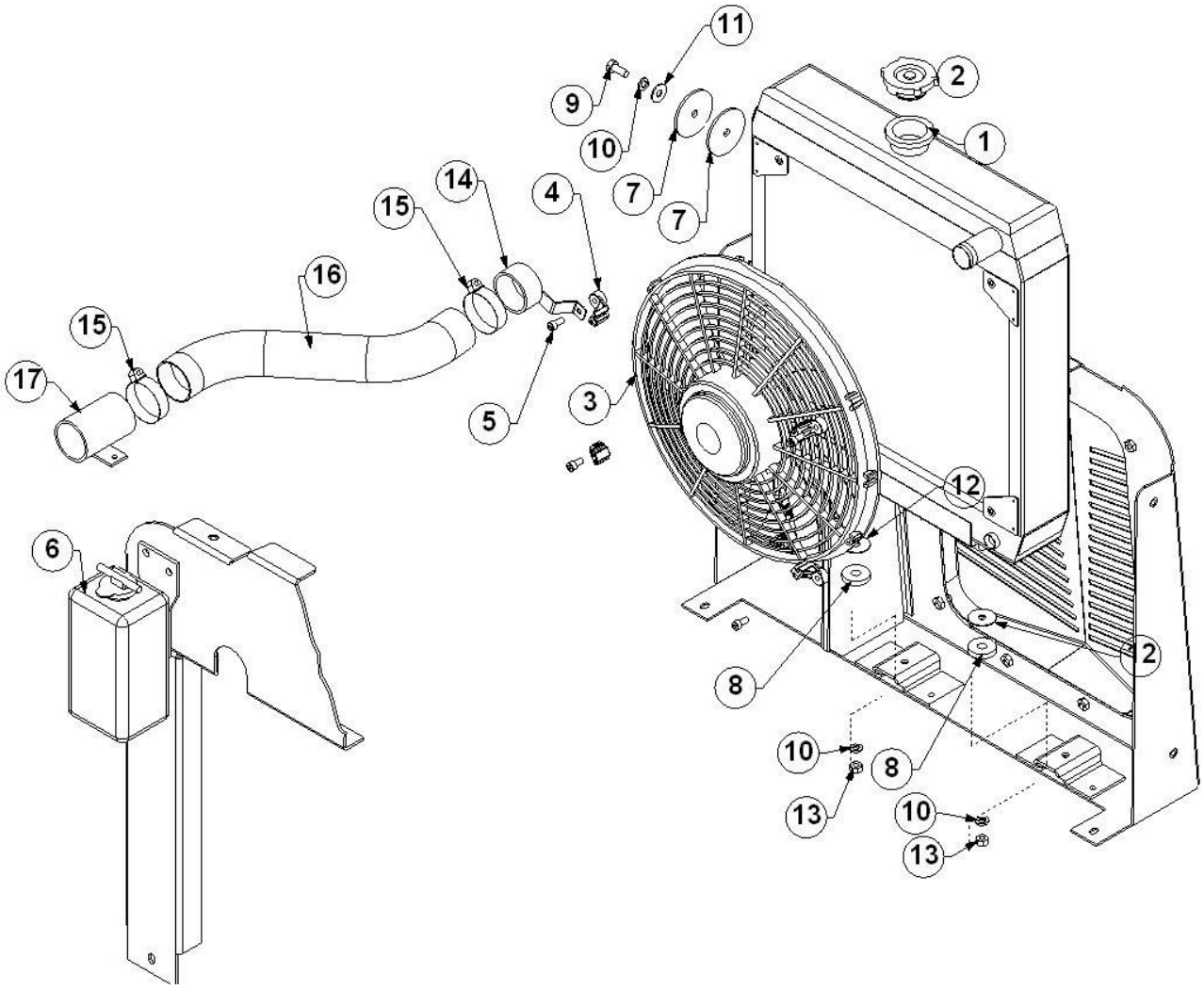

5-6

RADIATOR INSTALLATION

Item No.	Part Number	Qty	Description
1	63-039	1	RADIATOR, BLUEWAVE KUBOTA
2	40-002	1	CAP, RADIATOR A-15
3	35-006	1	FAN, SUMMIT ELECTRIC RADIATOR.ics
4	35-007	4	MOUNT, FEET SPAL ELEC FAN
5	10-007	4	SCREW, MACH 1/4-20 X 1/2 SOCHD SS
6	36-040	1	BOTTLE, O/F KUBOTA#1905972090
7	41-016	2	GROMMET, RAD MTG. SIDE
8	41-013	2	GROMMET, RAD MTG. BTM
9	10-034	1	SCREW, MACH 5/16-18 X 3/4 HXHD
10	12-016	3	LKWSR, 5/16 ZINC
11	12-017	1	WASHER, FLAT 5/16 SAE
12	41-015	2	WASHER, RAD MTG.
13	11-005	2	NUT, 5/16-18 ZINC
14	61-166	1	ASSY,FAN HOSE MOUNT
15	14-010	2	CLAMP, HOSE #32
16	16-049	1	HOSE,CARB PRE-HEATER 2" X 36"
17	61-359	1	ASSY, BW INTAKE HOSE REAR BRKT

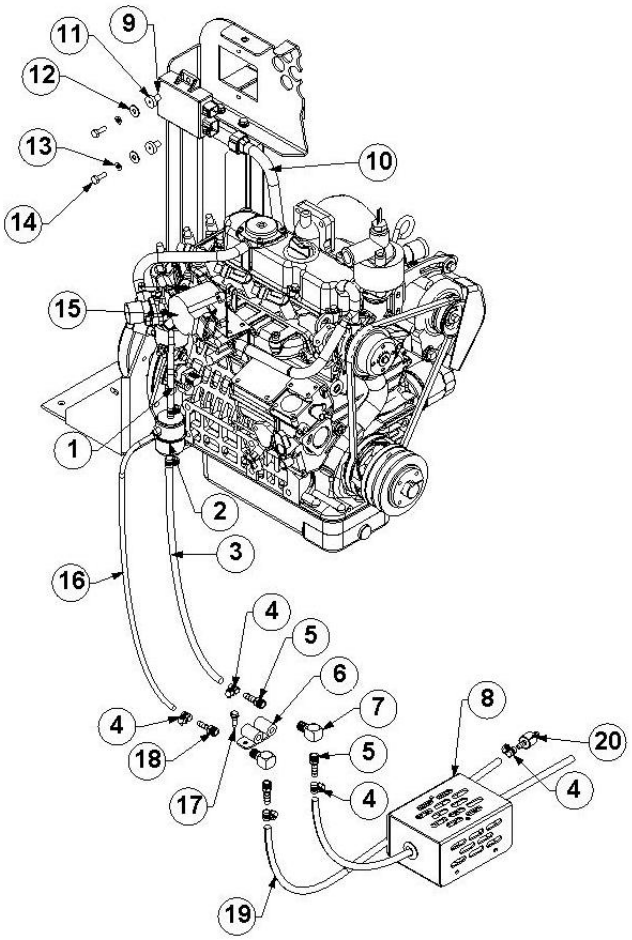

5-7

ENGINE FUEL SYSTEM

Item No.	Part Number	Qty	Description
1	16-029	1	HOSE, FUEL 3-8 IN 30R7
2	36-212	1	FILTER,FUEL 5/16 W/ 1/4 RETURN
3	16-029	1	HOSE, FUEL 3-8 IN 30R7
4	14-007	8	CLAMP, HOSE # 4
5	21-006	3	FTTG, BRB 1/4PX5//16H BR
6	61-204	1	BRKT, FUEL CONNECTOR W/RETURN
7	21-125	2	ELL,STREET 1/4P 1 3/16L 90 DEG
8	68-082	1	ASSY,FUEL PUMP HOUSING BW
9	36-162	1	CONTROL, COMPUTER KUBOTA
10	47-028	1	HARNESS, COMPUTER KUBOTA
11	41-025	2	GROMMET, ECU VIBRATION
12	12-012	2	WASHER, FLAT 1/4 SAE
13	12-015	2	LKWSR, 1/4 ZINC
14	10-020	2	SCREW, MACH 1/4-20 X 3/4 HXHD SS
15		1	THROTTLE CONTROL ASSEMBLY BW
16	16-034	1	HOSE, FUEL 1/4" 30R7
17	10-035	1	SCREW,1/4 X 1 HWH TEKS 3
18	21-166	1	FTTG, 1/4 MP X 1/4 H BARB
19	16-029	1	HOSE, FUEL 3-8 IN 30R7
20	23-045	1	VLV, FUEL CHECK BLUEWAVE

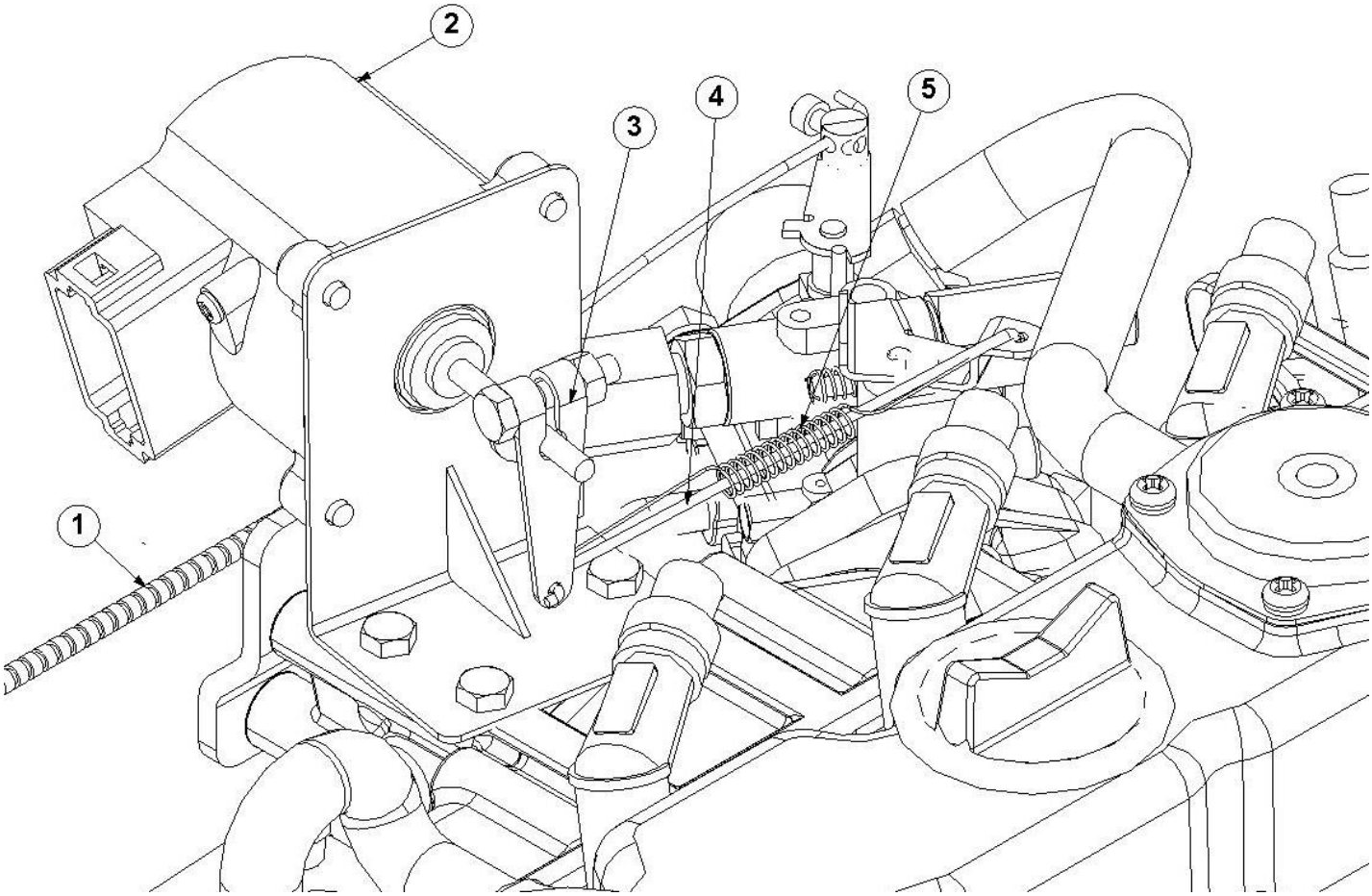

THROTTLE CONTROL ASSEMBLY

Item No.	Part Number	Qty	Description
1	40-001	1	CABLE, CHOKE
2	36-161	1	ACTUATOR, APECS DIGITAL ROTARY
3	36-225	1	LEVER, THROTTLE CONTROL KUBOTA
4	36-226	1	ROD, GOVENOR KUBOTA
5	36-227	1	SPRING, THROTTLE KUBOTA

Oil PSI Switch Carquest PS15

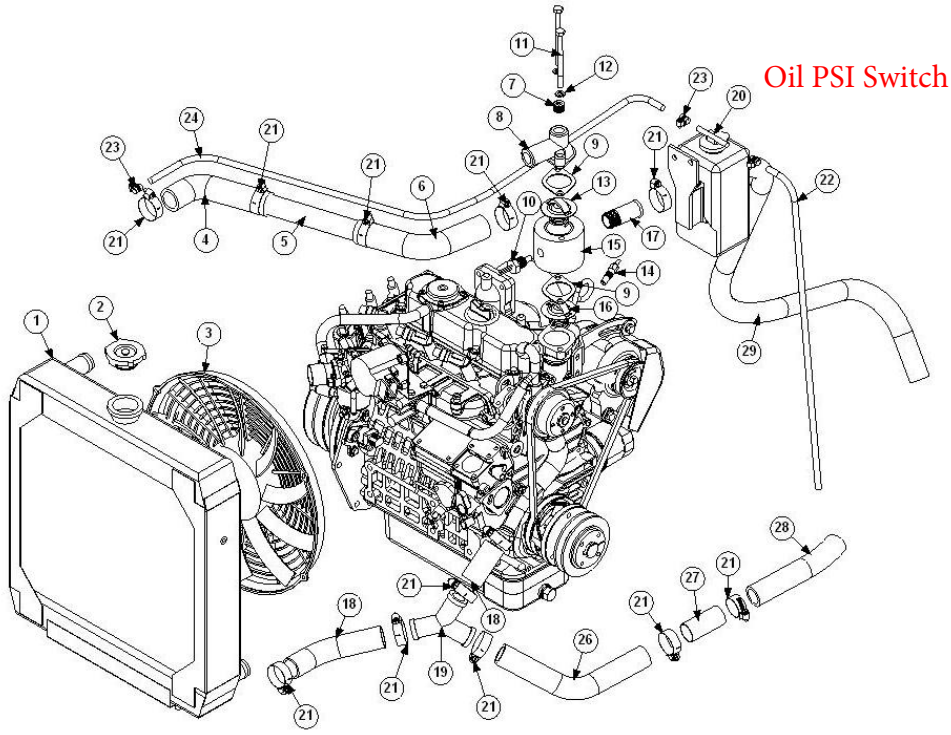

5-8

ENGINE COOLING SYSTEM

Item No.	Part Number	Qty	Description
1	63-039	1	RADIATOR, BLUEWAVE KUBOTA
2	40-002	1	CAP, RADIATOR A-15
3	35-006	1	FAN, SUMMIT ELECTRIC RADIATOR
4	17-386	1	HOSE RADIATOR BW LEFT
5	55-025	10	TBG, SS 1-1/4 OD X .049W 304
6	17-385	1	HOSE, RADIATOR BW RIGHT
7	21-146	1	PLUG, 3/8 NPT BRASS
8	36-163	1	HOUSING, THERMOSTAT KUBOTA 90 DEG
9	41-026	2	GASKET, THERMOSTAT KUBOTA
10	29-023	1	SWITCH, 195 DEG W/LEADS
11	10-083	2	SCREW, 8 X 1.25 X 100 SHCS
12	12-005	2	LKWSR, M8 HARD
13	34-014	1	THERMOSTAT, KUBOTA 195 DEG
14	34-001	1	SENSOR, TEMP AIRPAX 240 FHT
15	66-063	1	ADAPTER,THERM0STAT HOUSING
16	34-016	1	THERMOSTAT, KUBOTA 160 DEG
17	66-092	1	ADAPTOR, COOLANT HELICOIL 1 INCH.ics
18	16-008	8	HOSE, RADIATOR 1-1/8 50 FT BULK
19	51-011	1	CASTING, Y COOLANT ADAPTOR
20	36-040	1	BOTTLE, O/F KUBOTA#1905972090
21	14-006	12	CLAMP, HOSE #20
22	16-029	22	HOSE, FUEL 3/8 IN 30R7
23	14-007	3	CLAMP, HOSE #4
24	16-029	22	HOSE, FUEL 3/8 IN 30R7
25	45-010	1	ENGINE, KUBOTA 31 HP
26	36-203	1	HOSE, RADIATOR / ENGINE TWII
27	55-025	2 1/2	TBG, SS 1-1/4 OD X .049W 304
28	16-008	6 1/2	HOSE, RADIATOR 1-1/8 50 FT BULK TWII
29	16-008	1	HOSE, RADIATOR 1-1/8 50 FT BULK

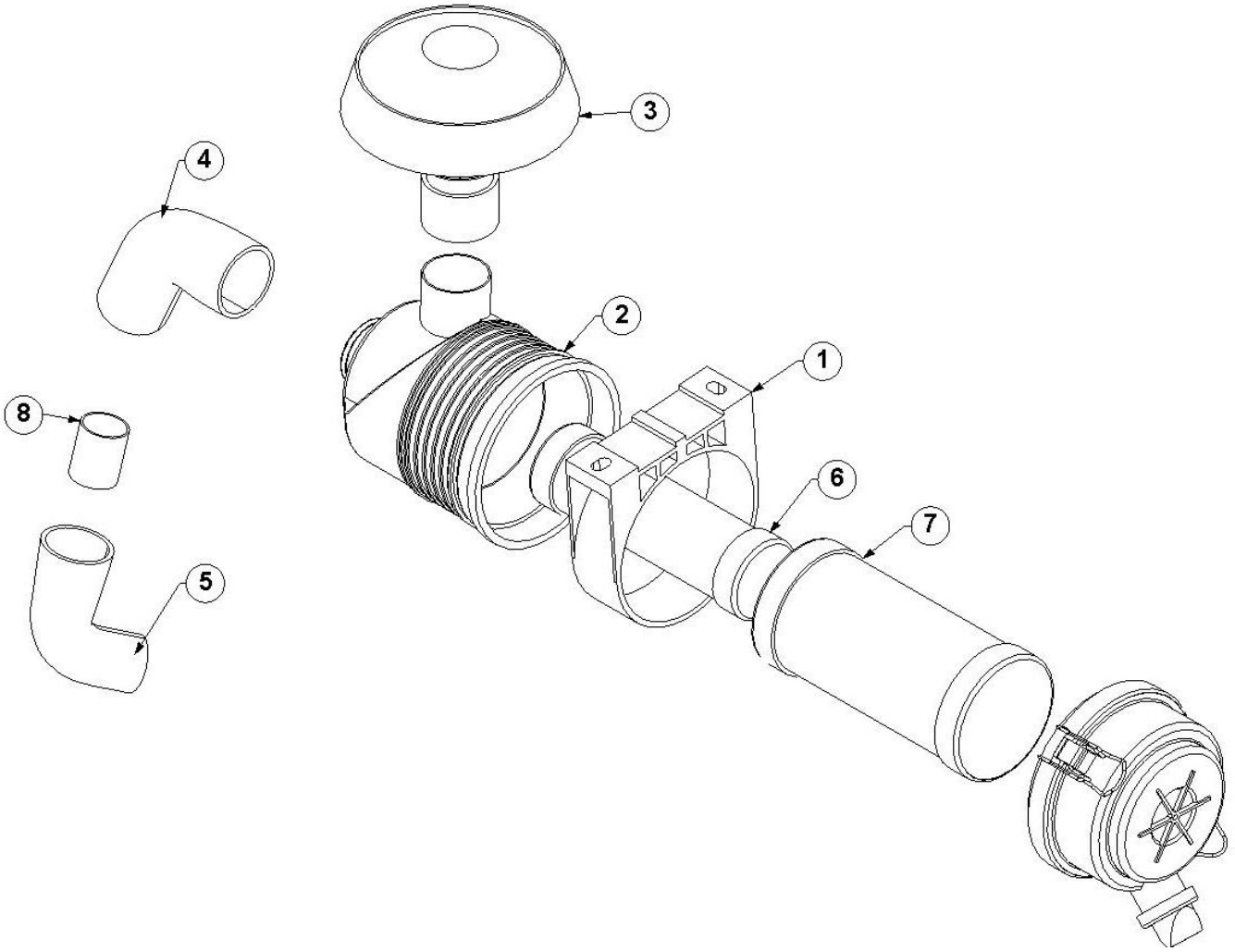

5-9

AIR CLEANER

Item No.	Part Number	Qty	Description
1	36-183	1	BAND, MTG AIR CLEANER DONALDSON
2	36-185	1	ASSY, AIR CLEANER 5.75 IN DNLDSON
3	36-186	1	CAP, RAIN 5.75 IN AIR CLEANER
4	36-086	1	ELBOW, 2-1/4 X 45 DEG. DONALD.
5	36-085	1	ELBOW, 2-1/4 X 90 DEG. DONALD
6	36-209	1	FILTER, AIR INTAKE SAFETY
7	36-210	1	FILTER, AIR PRIMARY 5.75 DONALDSON
8	55-025	1	TBG, SS 1-1/4 OD X .049W 304

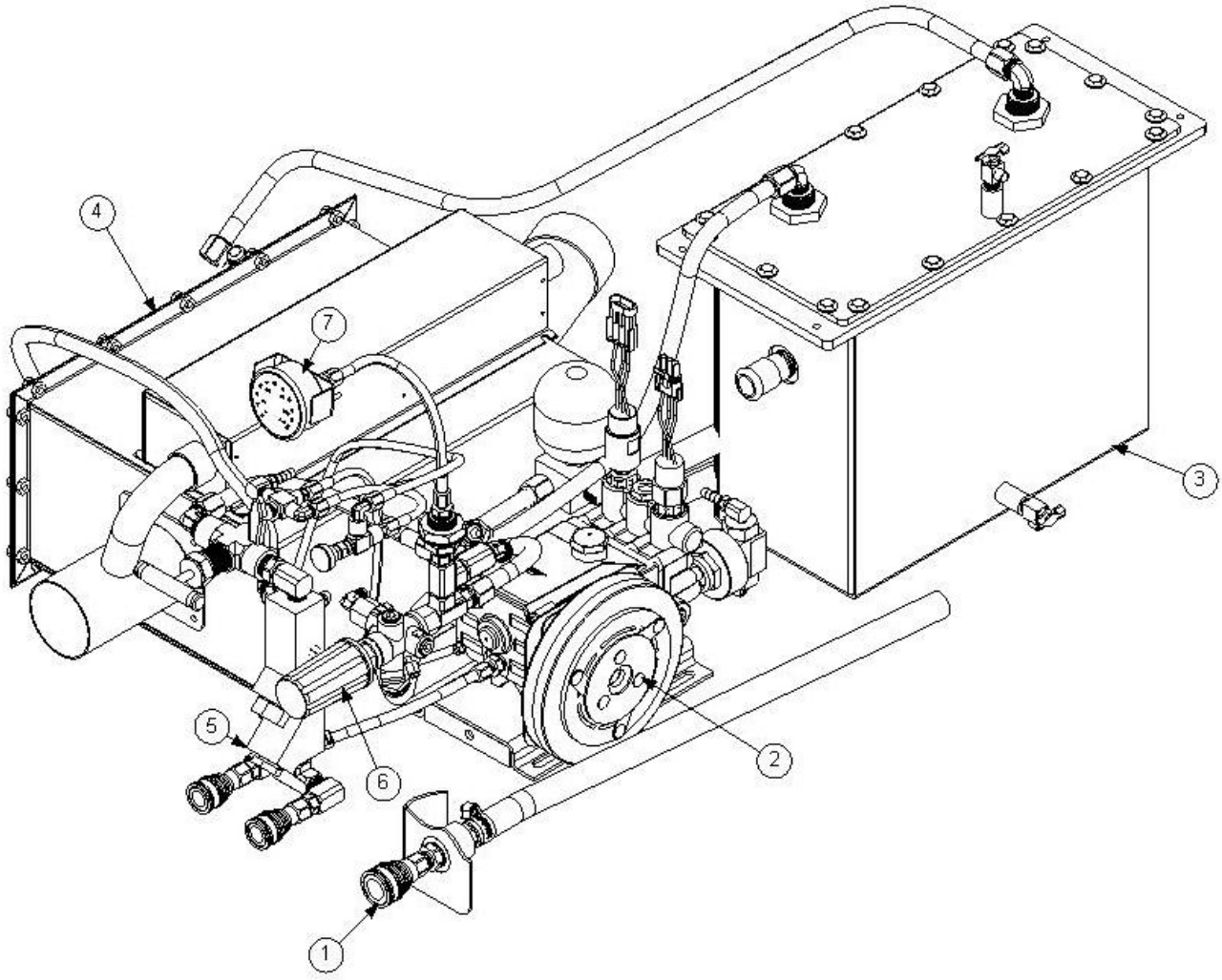

5-10

WATER TRANSFER SYSTEM

Item No.	Part Number	Qty	Description
1	25-005	1	DSC, 3/8X3/8FP BR
2	69-045	1	ASSY, WATER PUMP BLUEWAVE
3		1	ENGINE HEAT EXCHANGER ASSEMBLY
4		1	ASSY, HEAT EXCHANGER BLUEWAVE
5	69-038	1	ASSY, Y-STRAINER BLUEWAVE
6	69-043	1	ASSY, PRESSURE REGULATOR BW
7	26-005	1	GAUGE, WTR. PRESS1500PSIDUAL

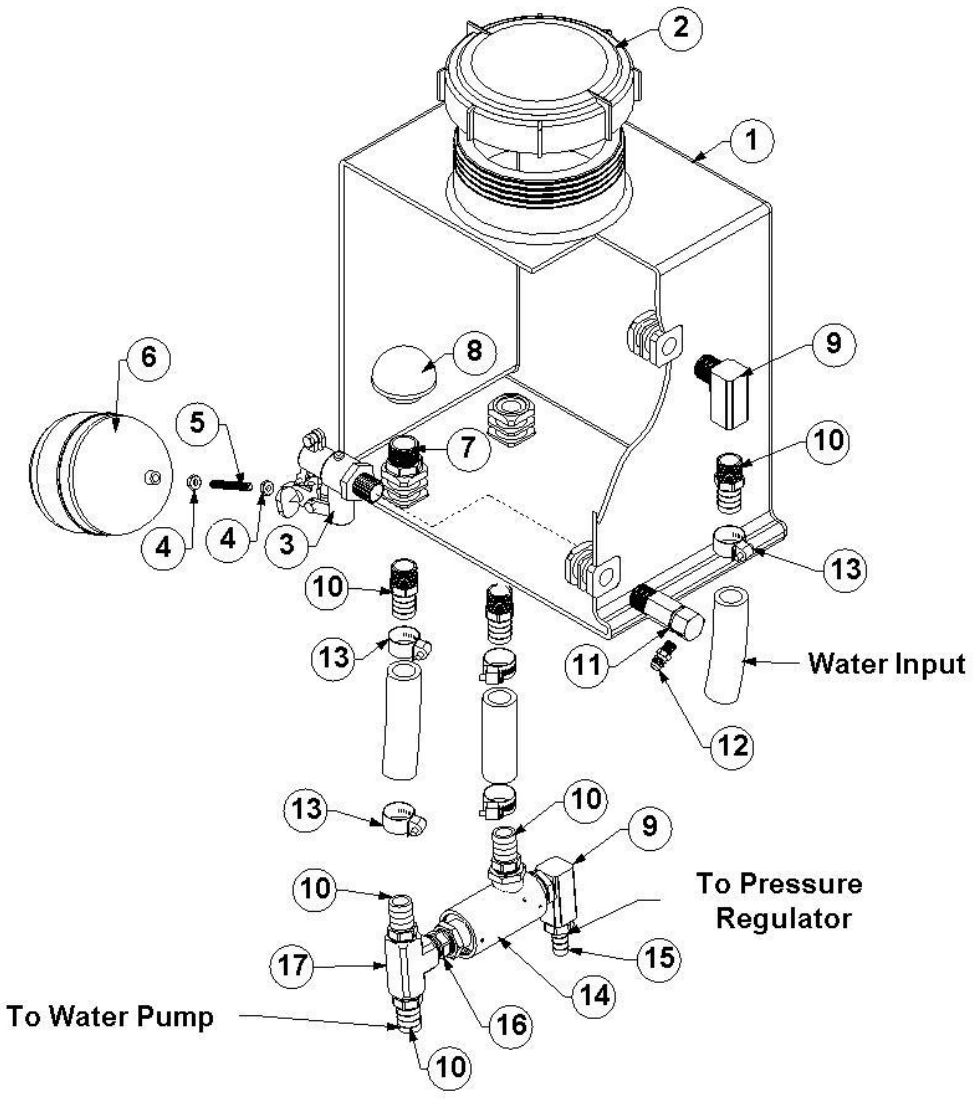

5-11

69-050 ASSY, WATER BOX BLUEWAVE

Item No.	Part Number	Qty	Description
1	51-002	1	MOLDING, WATER BOX DISCOVERY
2	21-025	1	CAP, 5 IN. WATER BOX/TANK BLACK
3	23-025	1	VLV, FLOAT WTR BOX THERMALWAVE
4	11-001	2	NUT, SS 1/4-20
5	64-000	1	ROD, FLOAT SS THERMAL WAVE
6	28-001	1	BALL, FLOAT
7	21-072	1	NIP, HEX 3/4 MP 1/2 MP
8	20-001	1	STRAINER, SUCTION END 3/4FP
9	21-034	2	ELL, STREET 1/2 BRASS
10	21-032	6	FTTG, BARB 1/2 P X 3/4 H BRASS
11	23-033	1	VLV, 165 DEG THERMAL CAT 7145
12	21-001	1	CONN, 1/8 P X 1/4 T BR
13	14-000	5	CLAMP, HOSE #12
14	23-030	1	VLV, BYPASS 1/2 IN 180 DEG BRASS
15	21-154	1	BARB, 1/2 MP X 1/2 H BRASS
16	21-047	1	NIP, 1/2 IN. HEX BRASS
17	21-110	1	TEE, 1/2 IN BRASS

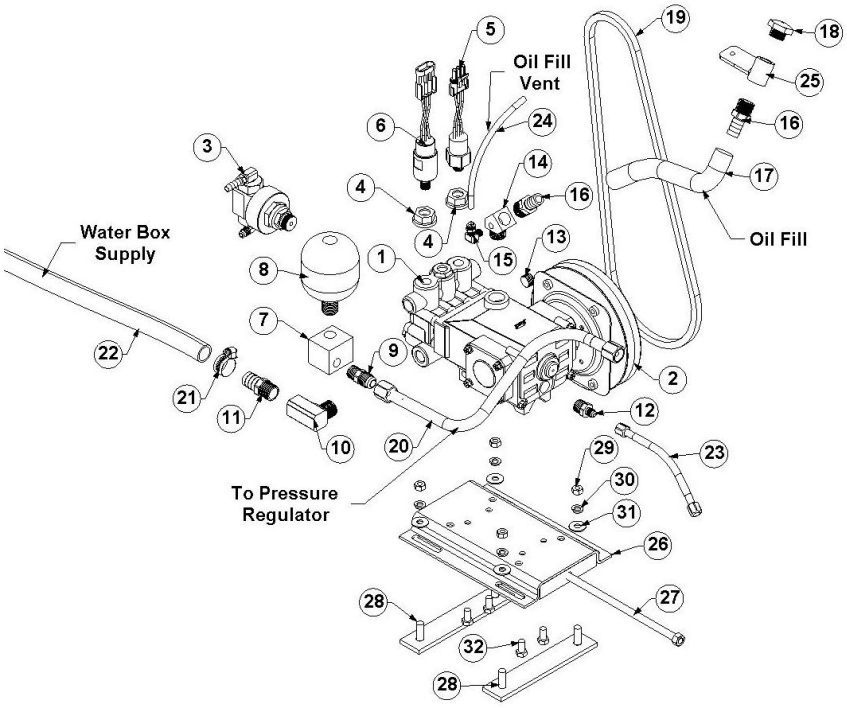

5-12

69-045 ASSY, WATER PUMP BLUEWAVE

Item No.	Part Number	Qty	Description
1	46-021	1	PUMP, CAT 3CP1120CS.3 HOT&DRY
2	35-001	1	CLUTCH, ELECT CAT3CP 16.5MM
3	46-012	1	PUMP, CHEMICAL STAINLESS STEEL
4	66-068	2	ADAPTOR, WATER PUMP BW
5	29-004	1	SWITCH, PRESS (50PSI)
6	29-005	1	SWITCH, PRESS (1000PSI)
7	66-102	1	FTTG, ACCUMULATOR ADAPTOR
8	46-020	1	ACCUMULATOR, CAT 6026
9	21-057	1	CONN, 3/8 P X 1/2 T BRASS
10	21-034	1	ELL, STREET 1/2 BRASS
11	21-032	1	FTTG, BARB 1/2 P X 3/4 H BRASS
12	21-017	1	CONN, 3/8 P X 1/4 T BR
13	21-065	1	PLUG, 1/2 SOLID BRASS HEXHD
14	66-091	1	FTTG,ST ELL 1/2 IN 45 DEG VENT
15	21-011	1	ELL, 1/8 P X 1/4 POLY BR
16	21-109	2	FTTG, BARB 1/2 P X 5/8 B BRASS
17	16-003	1	HOSE, WTR. 1/2 IN HRZ. 500FT BULK
18	36-116	1	CAP, OIL FILL 3CP CAT # 45690
19	37-025	1	BELT, AX43 MATCH
20	18-054	1	HOSE,1/2X15 1/2FTX1/2FT
21	14-000	1	CLAMP, HOSE #12
22	17-060	1	HOSE, WATER 3/4 X 48 IN.
23	18-029	1	HOSE, 3/16 X 11-3/4 1/4 FT X 1/4 FT
24	16-017	1	TUBING, IMPOLENE 250FT.
25	61-147	1	ASSY, OIL FILL CAT PUMP BW
26	61-016	1	MT. PUMP CAT 340 HT
27	61-123	1	BOLT, PUMP ADJUSTMENT BW
28	61-028	2	PLT, BOLT CAT PUMP
29	11-005	4	NUT, 5/16-18 ZINC
30	12-016	4	LKWSR, 5/16 ZINC
31	12-017	4	WASHER, FLAT 5/16 SAE
32	10-008	4	SCREW, MACH 8MM-16 X 1.25MM

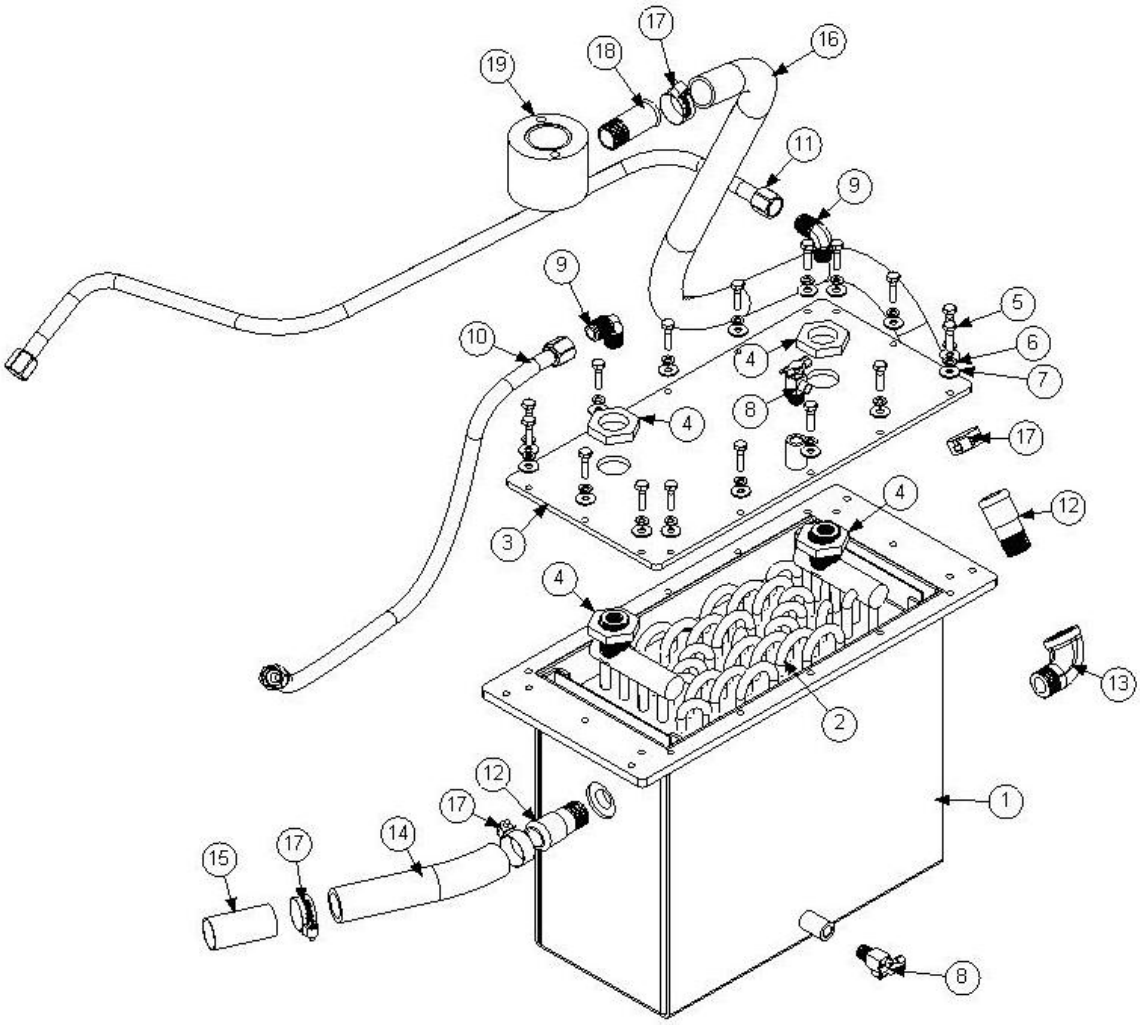

5-13

BLUEWAVE ENGINE HEAT EXCHANGER

Item No.	Part Number	Qty	Description
1	61-241	1	ASSY,HEAT EXCH ENGINE TWII HP
2	63-064	1	ASSY,ENG HTR CORE 12 RW COPPER
3	61-243	1	ASSY,PNL ENG HEAT EXH CVR
4	66-116	4	NUT, HELI-COIL STAINLESS
5	10-026	16	SCREW, MACH 1/4-20 X 1 HXHD
6	12-015	16	LKWSR, 1/4 ZINC
7	12-012	16	WASHER, FLAT 1/4 SAE
8	23-008	2	COCK, DRN 1-4 PX1-4HOS ELL BR
9	21-061	2	ELL, 3/8 P X 1/2 T BRASS
10	18-036	1	HOSE, 1/2 X 27 1/2FT X 1/2FT W/CVR
11	18-090	1	HOSE,1/2X40 1/2FT X 1/2FT W/CVR
12	66-033	2	3/4 NPT TO 1-1/8 HOSE
13	21-077	1	ELL, STREET PIPE 3/4 90 DEG
14	16-008	6-1/2"	HOSE, RADIATOR 1-1/8 50 FT BULK TWII
15	55-025	2-1/2"	TBG, SS 1-1/4 OD X .049W 304
16	16-008	1	HOSE, RADIATOR 1-1/8 50 FT BULK
17	14-006	4	CLAMP, HOSE #20
18	66-092	1	ADAPTOR, COOLANT HELICOIL 1 INCH
19	66-063	1	ADAPTER,THERM0STAT HOUSING

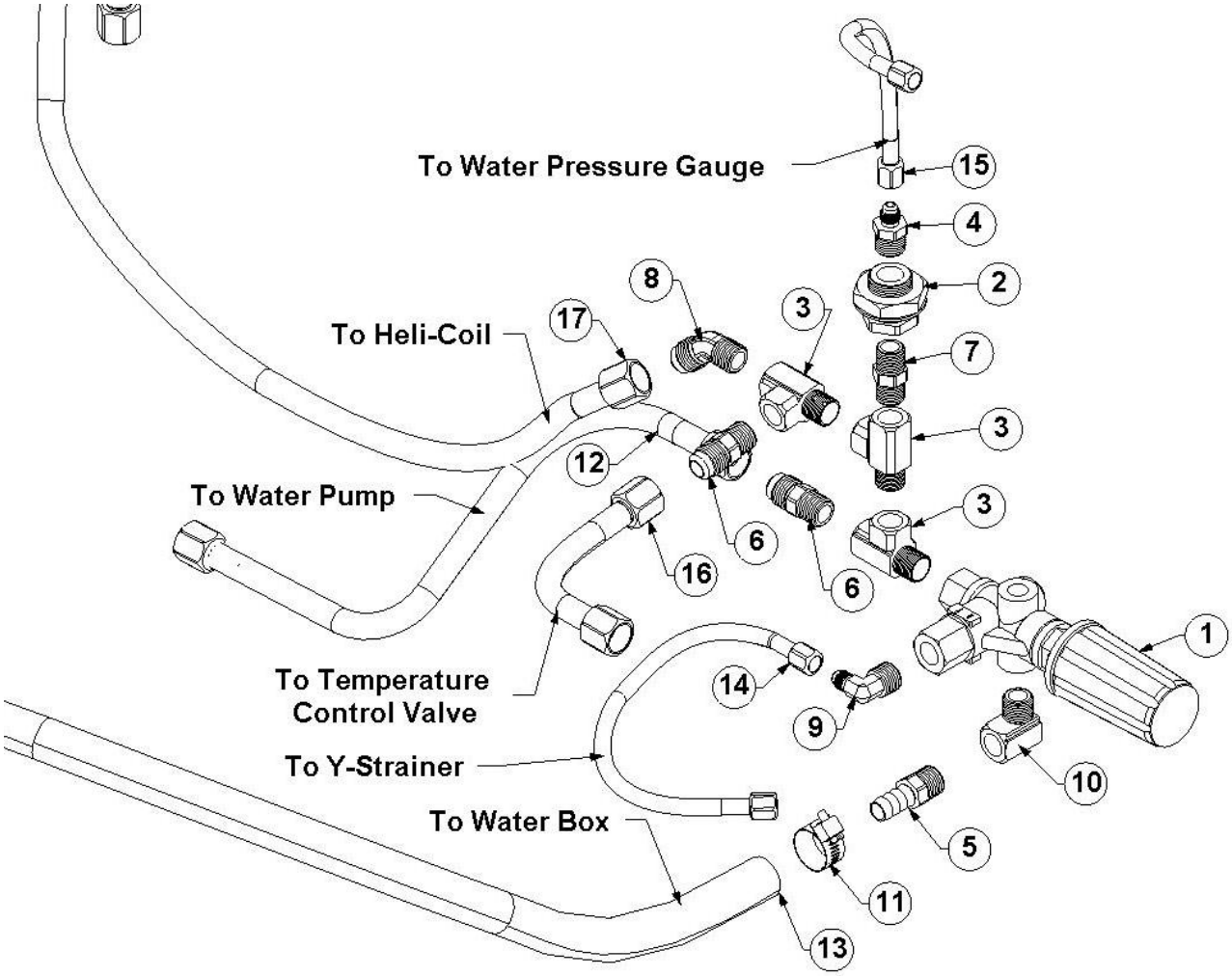

5-14

69-043 ASSY, PRESSURE REGULATOR BW

Item No.	Part Number	Qty	Description
1	23-021	1	Pressure Regulator
2	21-080	1	FTTG, BULKHEAD 3/8 BRASS
3	21-062	3	TEE, 3/8 F X M X F BRASS
4	21-017	1	CONN, 3/8 P X 1/4 T BR
5	21-014	1	FTTG, BRB 3/8 PX 1/2 H BR
6	21-057	2	CONN, 3/8 P X 1/2 T BRASS
7	21-046	1	NIP, 3/8 IN. HEX BRASS
8	21-059	1	ELL, 3/8 P X 1/2 T 45DEG BRASS
9	21-063	1	ELL, 3/8 P X 1/4 T BRASS
10	21-040	1	ELL, STREET 3/8 IN. BRASS
11	14-011	1	CLAMP, HOSE #6
12	18-054	1	HOSE,1/2X15 1/2FTX1/2FT
13	17-253	1	HOSE, WATER 1/2 IN x 80 IN W/CVR
14	18-016	1	HOSE, 3/16 X 16-1/2 1/4FT X 1/4FT
15	18-062	1	HOSE 3/16 X 10" 1/4FT BS
16	18-034	1	HOSE, 1/2 X 11 1/2FT X 1/2FT W/CVR
17	18-036	1	HOSE, 1/2 X 27 1/2FT X 1/2FT W/CVR

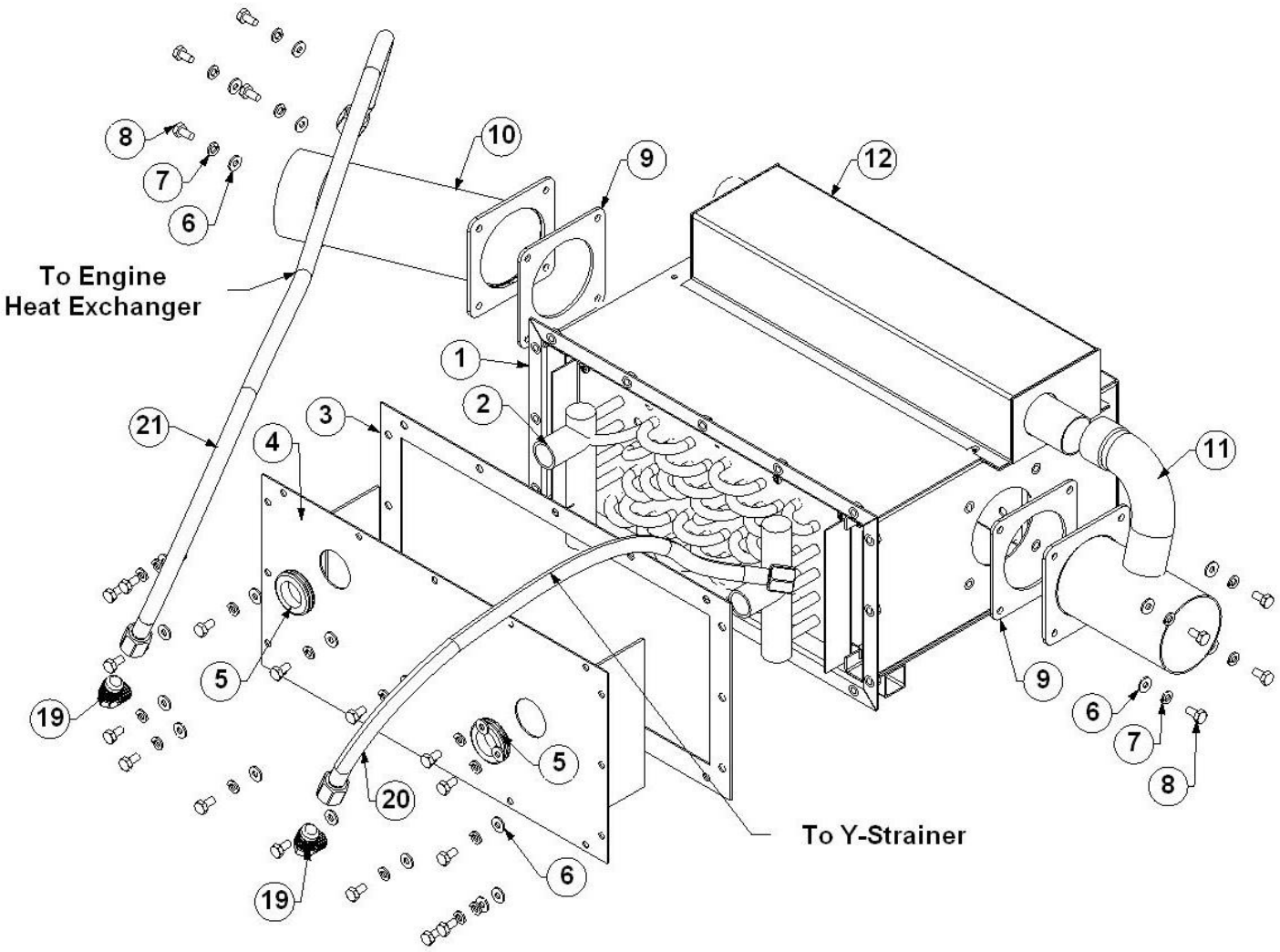

5-16

HEAT EXCHANGER BLUEWAVE

Item No.	Part Number	Qty	Description
1	61-125	1	ASSY, HEAT EXCHANGER HOUSING
2	63-033	1	ASSY, VAC HEATER CORE BLUEWAVE
3	41-029	1	GASKET, HEATER CORE BLUEWAVE
4	61-126	1	ASSY, HEAT EXCHANGER COVER BW
5	41-033	2	GROMMET, 1 ID X 1-3/4OD
6	12-011	24	WASHER, FLAT #12 SAE
7	12-015	24	LKWSR, 1/4 ZINC
8	10-006	24	SCREW, MACH 1/4-20 X 1/2 HEXHD
9	41-037	2	GASKET, HIGH TEMP SILENCER EXHST
10	61-108	1	ASSY, EXHAUST TUBE SILENCER BW
11	61-345	1	ASSY,EXHAUST ENG-VAC ADAPTOR
12	63-088	1	MUFFLER, BLUEWAVE LOWER
13	21-061	2	ELL, 3/8 P X 1/2 T BRASS
14	18-036	1	HOSE, 1/2 X 27 1/2FT X 1/2FT W/CVR
15	18-090	1	HOSE,1/2X40 1/2FT X 1/2FT W/CVR

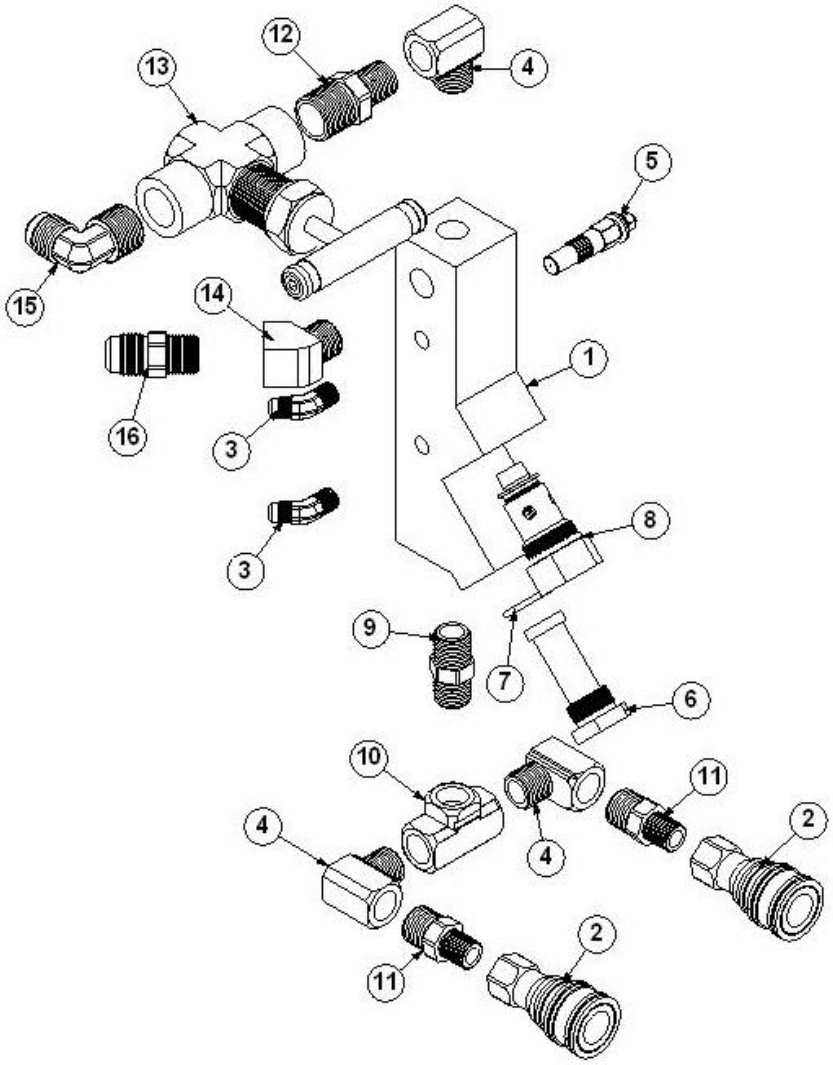

5-18

69-038 ASSY, Y-STRAINER BLUEWAVE

Item No.	Part Number	Qty	Description
1	66-075	1	MANIFOLD, CHECK VALVE BW (YSTRAIN)
2	25-001	2	DSC, 1/4X1/4FP BR
3	21-055	2	ELL, 1/8 P X 1/4 T 45DEG BRASS
4	21-040	3	ELL, STREET 3/8 IN. BRASS
5	34-000	1	SENDER, TEMP 140-320 DEGREE
6	20-018	1	SCREEN, CHECK VALVE MANIFOLD
7	41-007	1	ORING, 7/8 ID 1-1/16 OD
8	23-023	1	VLV, CHECK, CHECK VLV MANIFOLD
9	21-046	1	NIP, 3/8 IN. HEX BRASS
10	21-041	1	TEE, 3/8 IN. BRASS
11	21-052	2	NIP, 3/8 X 1/4 HEX BRASS
12	21-030	1	NIP, HEX 1/2 X 3/8 BRASS
13	23-044	1	VLV, CONTROL BLUEWAVE
14	21-043	1	ELL, STREET 3/8 IN. 45 DEG BRASS
15	21-015	1	ELL, 1/2 P X 1/2 T BRASS
16	21-057	1	CONN, 3/8 P X 1/2 T BRASS

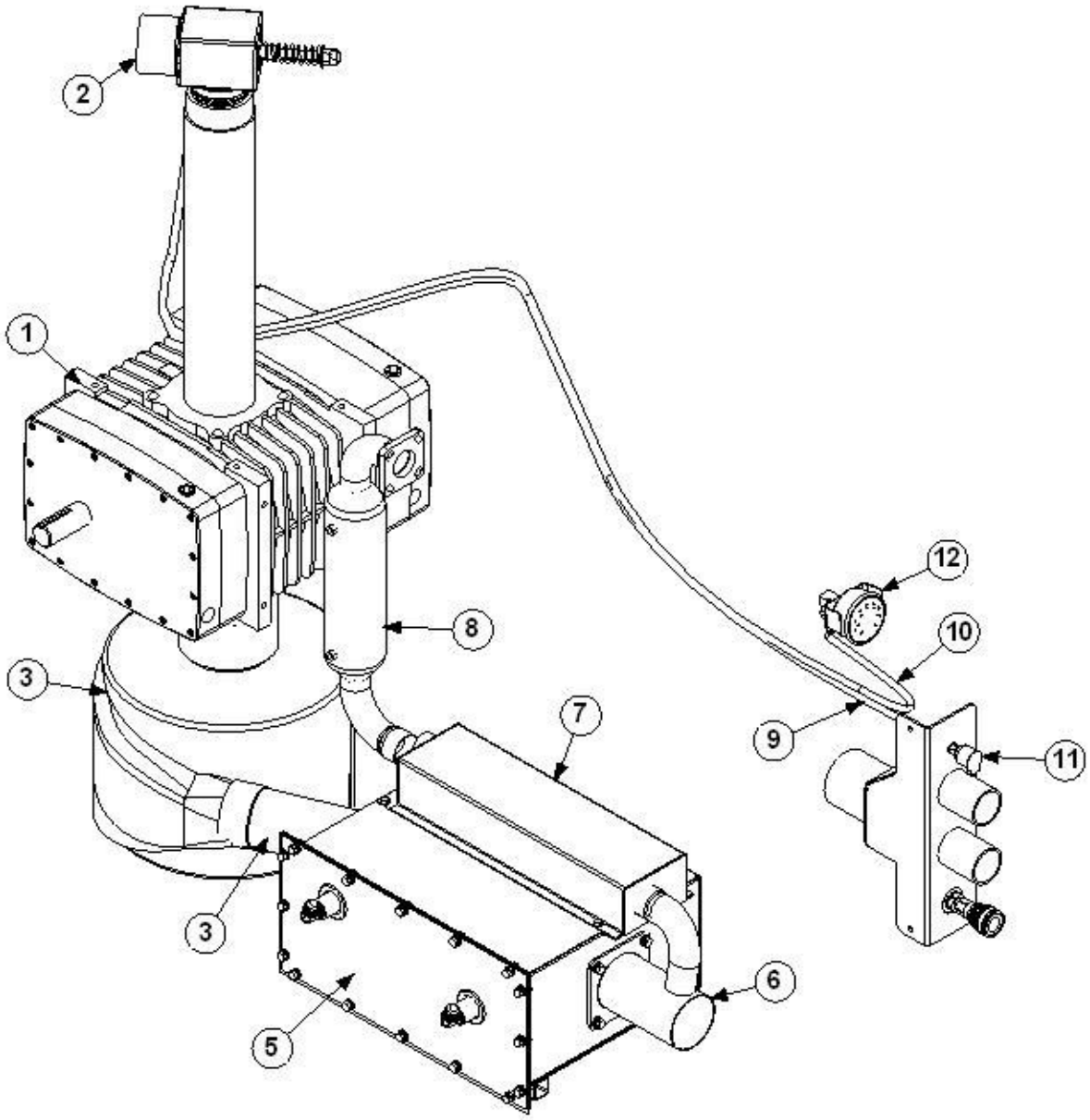

5-20

VACUUM-EXHAUST SYSTEM

Item No.	Part Number	Qty	Description
1	46-030	1	VACUUM PUMP TI-408 HOR(LH)
2	69-049	1	ASSY,VAC BRAKE TRI-LOBE
3	63-035	1	MUFFLER, VACUUM 5M REV BW
4	61-108	1	ASSY, EXHAUST TUBE SILENCER BW
5		1	ASSY, HEAT EXCHANGER BLUEWAVE
6	61-345	1	ASSY,EXHAUST ENG-VAC ADAPTOR
7	63-088	1	MUFFLER, BLUEWAVE LOWER
8	61-342	1	ASSY, BLUEWAVE EXHAUST ADAPTOR
9	16-017	1	TUBING, IMPOLENE 250FT.
10	16-017	1	TUBING, IMPOLENE 250FT.
11	28-000	1	CUP, OILFILL 1/8P
12	26-004	1	GUAGE, VAC 30in.HG DUALSCALE

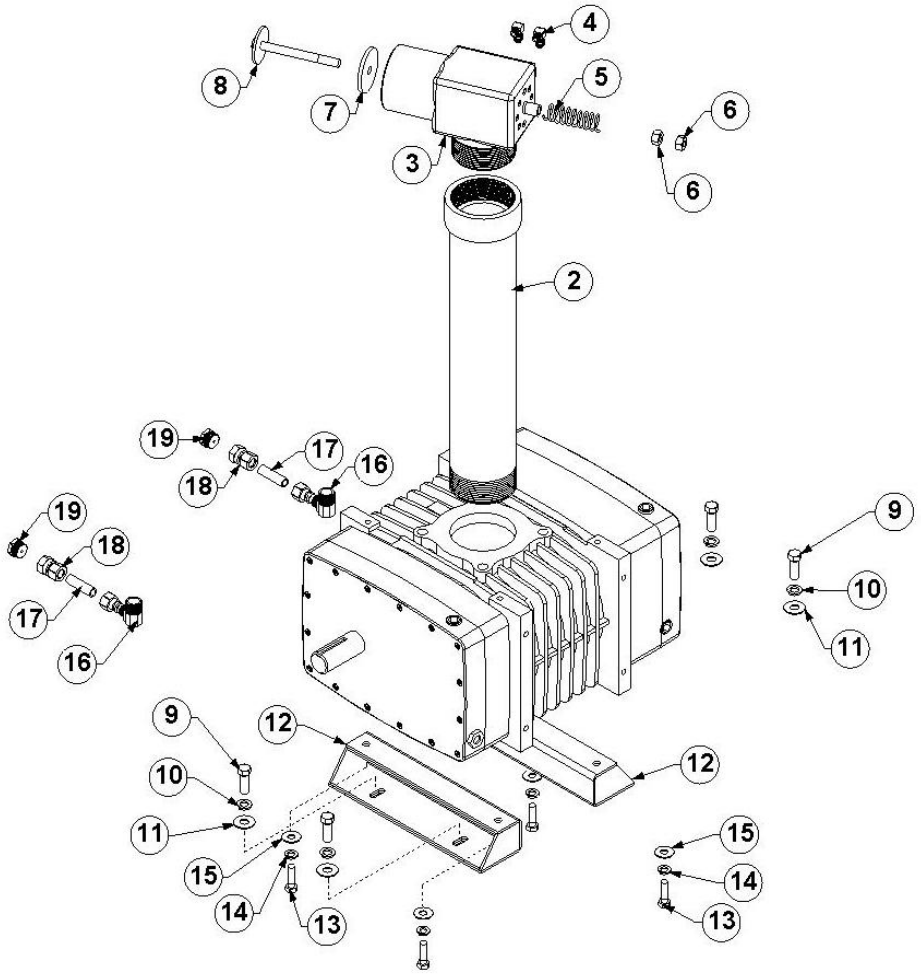

5-21

VACUUM PUMP ASSY

Item No.	Part Number	Qty	Description
1	46-030	1	VACUUM PUMP TI-408 HOR(LH)
2	61-124*	1	ASSY, ADAPTOR VAC STANDPIPE BW
3	66-001	1	VAC BRAKE, MACHINED 4L
4	21-011	2	ELL, 1/8 P X 1/4 POLY BR
5	15-002	1	SPRING, VAC RELIEF VALVE
6	11-012	2	NUT, 7/16-14 ZINC
7	41-009	1	DIAPHRAGM, VAC RELIEF VLV 4L,54M
8	61-077	1	STEM, VACUUM RELIEF VLV 3L/4M
9	10-041	4	SCREW, MACH 7/16-14 X 1-1/4 HXHD
10	12-020	4	LKWSR, 7/16 ZINC
11	12-021	4	WASHER, FLAT 7/16 ZINC
12	61-148	2	ASSY, MOUNT Ti408 BLOWER
13	10-004	4	SCREW, MACH 3/8-16 X 1-1/4 HEXHD
14	12-014	4	LKWSR, 3/8 ZINC
15	12-013	4	WASHER, FLAT 3/8 SAE
16	21-156	2	FTTG, 1/2"OD TUBE X 1/4 MP 90
17	55-005	2	TBG, SS 1/2 IN OD X .065W 316L
18	21-164	2	FTTG, 1/2 TUBE COMP X 1/2 NPT
19	21-065	2	PLUG, 1/2 SOLID BRASS HEX HD

*61-144 with sub-mount water tank
*61-170 with 100 gallon water tank

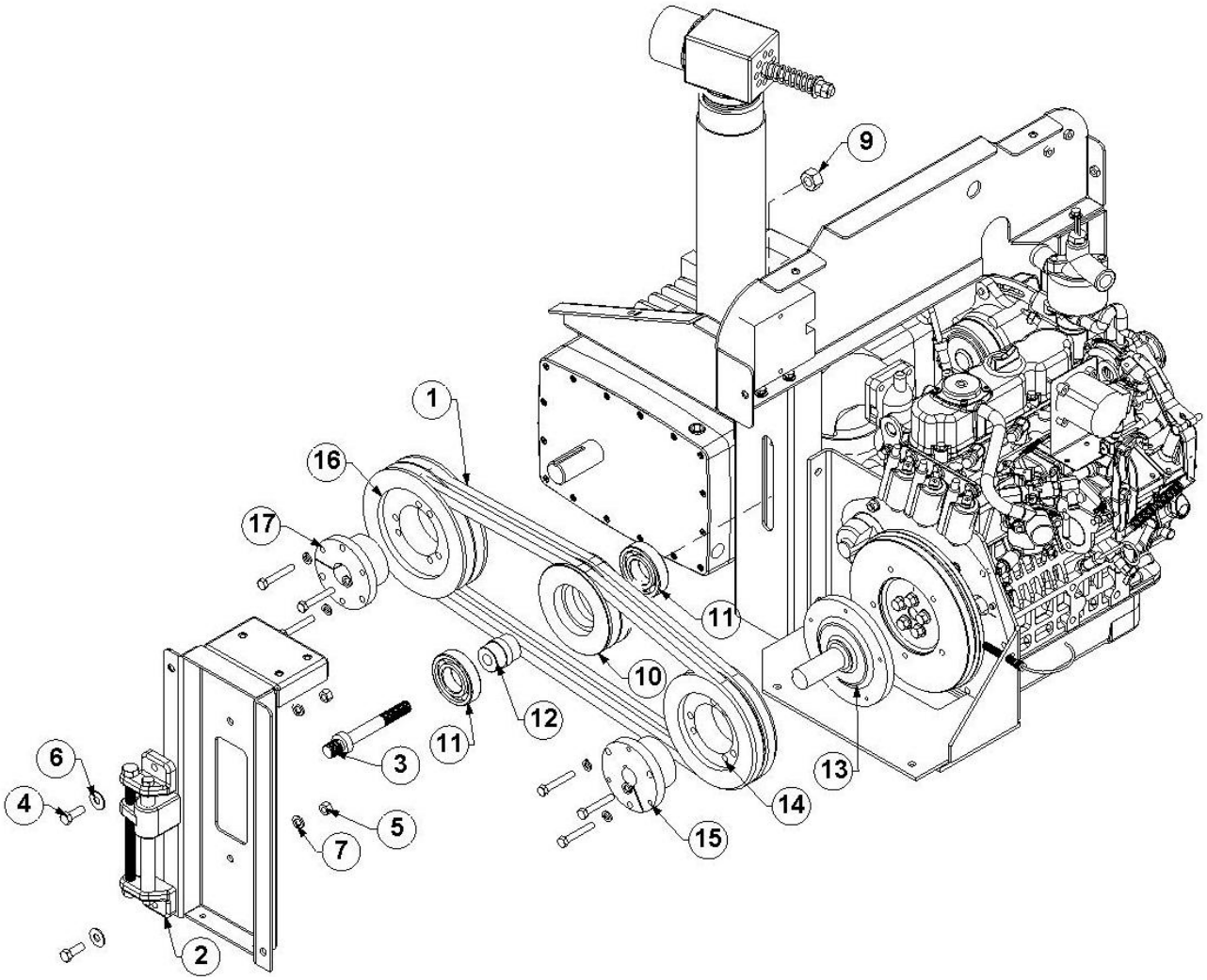

5-22

IDLER PULLEY ASSEMBLY

Item No.	Part Number	Qty	Description
1	37-039	2	BELT, 5VX630
2	38-017	1	TENSIONER, RIGID CHAMP
3	66-051	1	IDLER BELT TENSIONER
4	10-029	2	SCREW, MACH 3/8-16 X 1 HXHD
5	11-006	2	NUT, 3/8-16 ZINC
6	12-013	2	WASHER, FLAT 3/8 SAE
7	12-014	2	LKWSR, 3/8 ZINC
8	46-030	1	VACUUM PUMP TI-408 HOR(LH)
9	11-016	1	NUT, HEX 5/8-11
10	66-082	1	PULLEY, TENSIONER 5.0 2G
11	39-018	2	BEARING, 35MM X 72MM X 17MM
12	66-080	1	SHAFT, TENSIONER 4.4 PULLEY
13	36-179	1	SHAFT, KUBOTA PUMP DRIVE
14	38-027	1	PULLEY, 5V630SK 2G
15	38-019	1	HUB, SK-1 1/8
16	38-028	1	PULLEY, 5V710SK 2G
17	38-032	1	HUB, SK 1-1/4

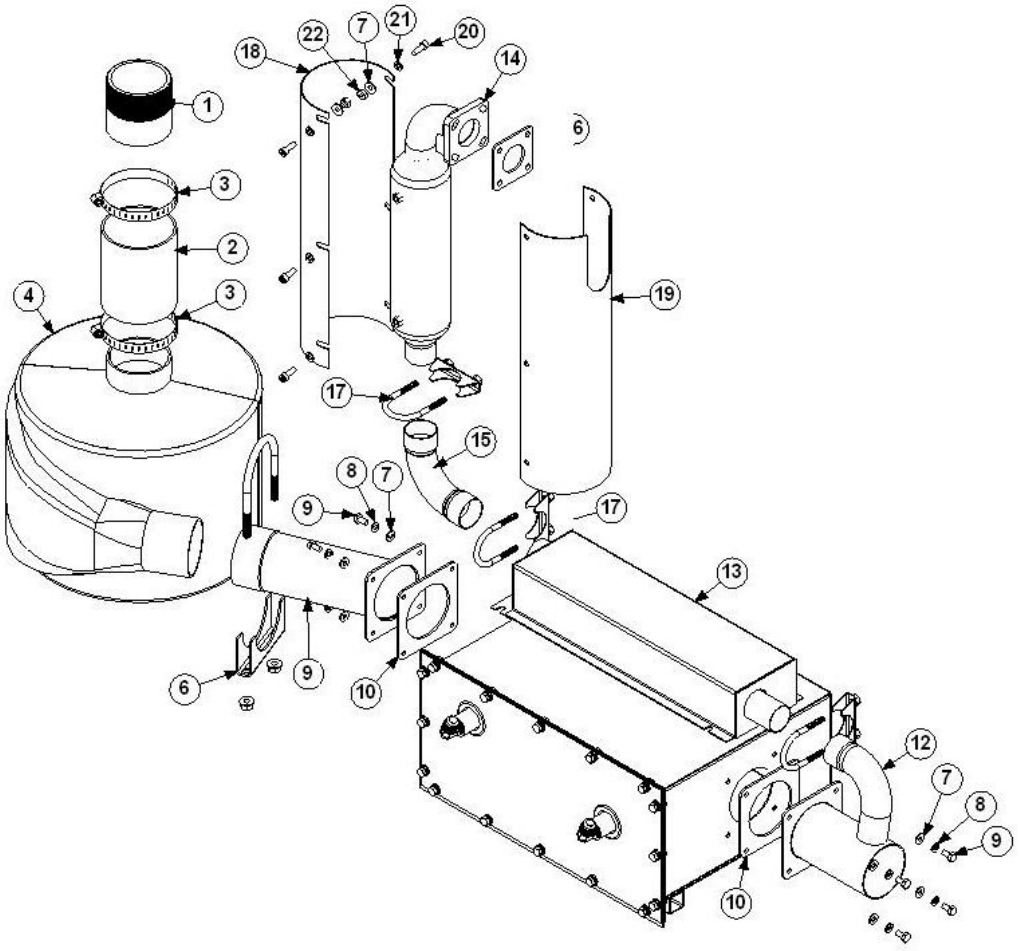

MUFFLER-EXHAUST ASSEMBLY

Item No.	Part Number	Qty	Description
1	64-008	1	NIP, HALF BLOWER OUTLET BW
2	16-053	3.5	HOSE, 3-1/2" LAWERENCE BLACK
3	14-008	2	#072 Hose Clamp (76/127mm)
4	63-035	1	MUFFLER, VACUUM 5M REV BW
5	61-108	1	ASSY, EXHAUST TUBE SILENCER BW
6	14-002	1	CLAMP, MUFFLER 3 IN.
7	12-011	10	WASHER, FLAT #12 SAE
8	12-015	8	LKWSR, 1/4 ZINC
9	10-006	8	SCREW, MACH 1/4-20 X 1/2 HEXHD
10	41-037	2	GASKET, HIGH TEMP SILENCER EXHST
11	69-046	1	ASSY, HEAT EXCHANGER BLUEWAVE
12	61-345	1	ASSY,EXHAUST ENG-VAC ADAPTOR
13	63-088	1	MUFFLER, BLUEWAVE LOWER
14	61-342	1	ASSY, BLUEWAVE EXHAUST ADAPTOR
15	63-089	1	TUBE, 1-1/2 90 DEG SS F-F
16	36-205	1	GASKET, EXHAUST KOHLER 4 BOLT
17	14-027	3	CLAMP, MUFFLER 1-1/2 IN.
18	58-258	1	PNL,BW UPPER EXHST R-HEAT SHIELD
19	58-257	1	PNL,BW UPPER EXHST F-HEAT SHIELD
20	10-021	6	SCREW, MACH 1/4-20 X 3/4 SOCHD SS
21	12-003	6	LKWSR, 1/4 IN SS
22	11-001	2	NUT, 1/4-20 SS

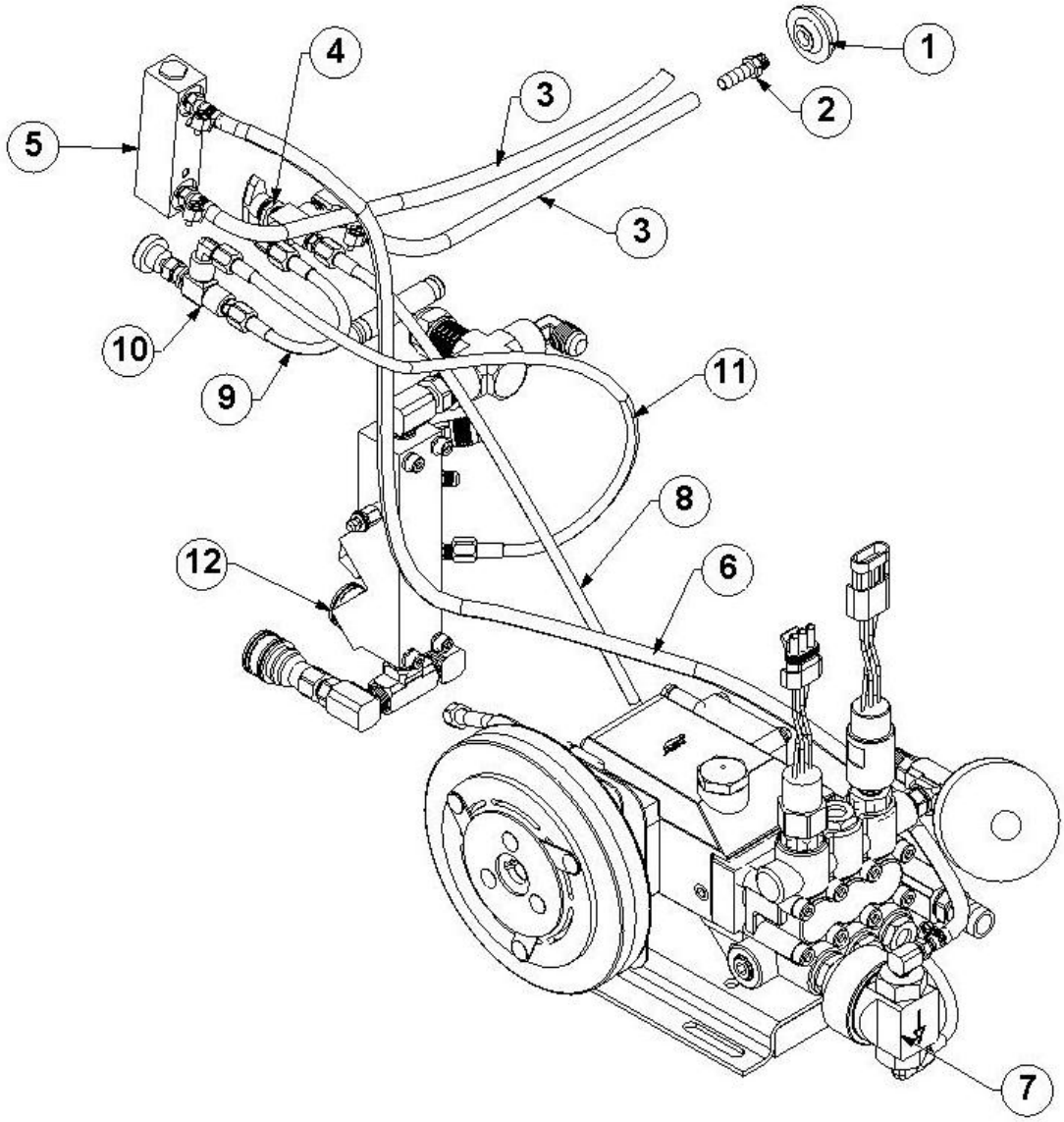

5-25

CHEMICAL PUMPING SYSTEM

Item No.	Part Number	Qty	Description
1	20-002	1	STRAINER, SUCTION END 1/8FP
2	21-007	1	FTTG,BRB 1/8 PX 5/16 H BR
3	17-309	2	HOSE, BRAIDED 5/16 X 65IN.
4	23-027	1	VLV, 3-WAY BALL 1/8 FP SS
5	26-003	1	FLOWMETER, 1/8FP
6	17-311	1	HOSE, BRAIDED 5/16 X 35IN.
7	46-012	1	PUMP, CHEMICAL STAINLESS STEEL
8	18-091	1	HOSE, 3/16 X 35 1/4FT X 1/4FT
9	18-029	1	HOSE, 3/16 X 11-3/4 1/4FT X 1/4FT
10	23-028	1	VLV, MET 1/8FP (CHEM) RT ANG SS
11	18-061	1	HOSE 3/16 X 22" 1/4FT BW
12	69-038	1	ASSY, Y-STRAINER BLUEWAVE

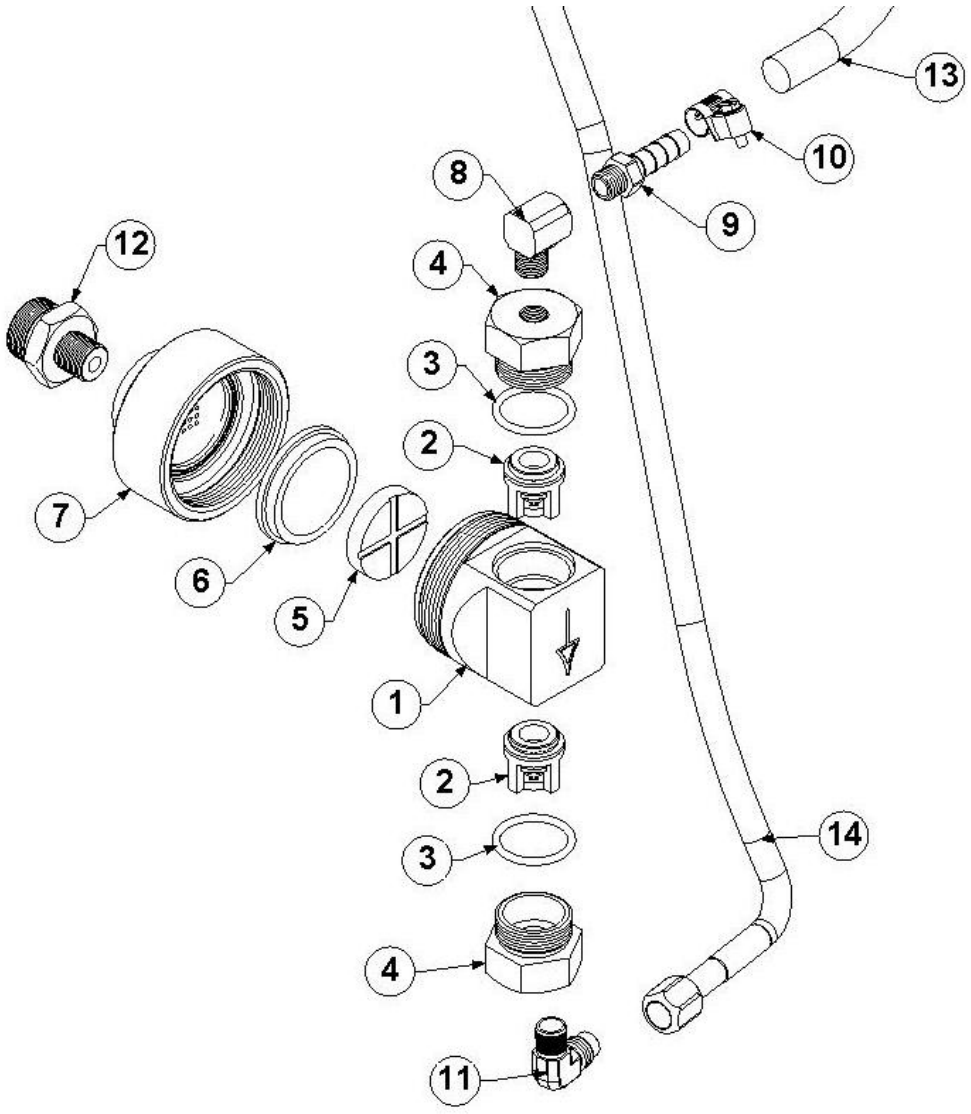

5-26

46-012 CHEMICAL PUMP, STAINLESS STEEL

Item No.	Part Number	Qty	Description
1	66-008	1	BODY, CHEMICAL PUMP STAINLESS
2	36-004	2	VLV, CHECK HYPRO
3	41-007	2	ORING, 7/8 ID 1-1/16 OD
4	66-006	2	CAP, CHECK VALVE CHEM PUMP SS
5	36-003	1	DISC, CHEM PUMP
6	36-000	1	DIAPHRAGM, CHEMICAL PUMP
7	66-007	1	COVER, CHEMICAL PUMP STAINLESS
8	21-038	1	ELL, STREET 1/8 IN. BRASS
9	21-007	1	FTTG,BRB 1/8 PX 5/16 H BR
10	14-011	1	CLAMP, HOSE FUEL #6
11	21-066	1	ELL, 1/8 P X 1/4 T SS
12	66-002	1	ADAPTOR, CHEMICAL PUMP
13	17-311	1	HOSE, BRAIDED 5/16 X 35IN.
14	18-091	1	HOSE, 3/16 X 35 1/4FT X 1/4FT

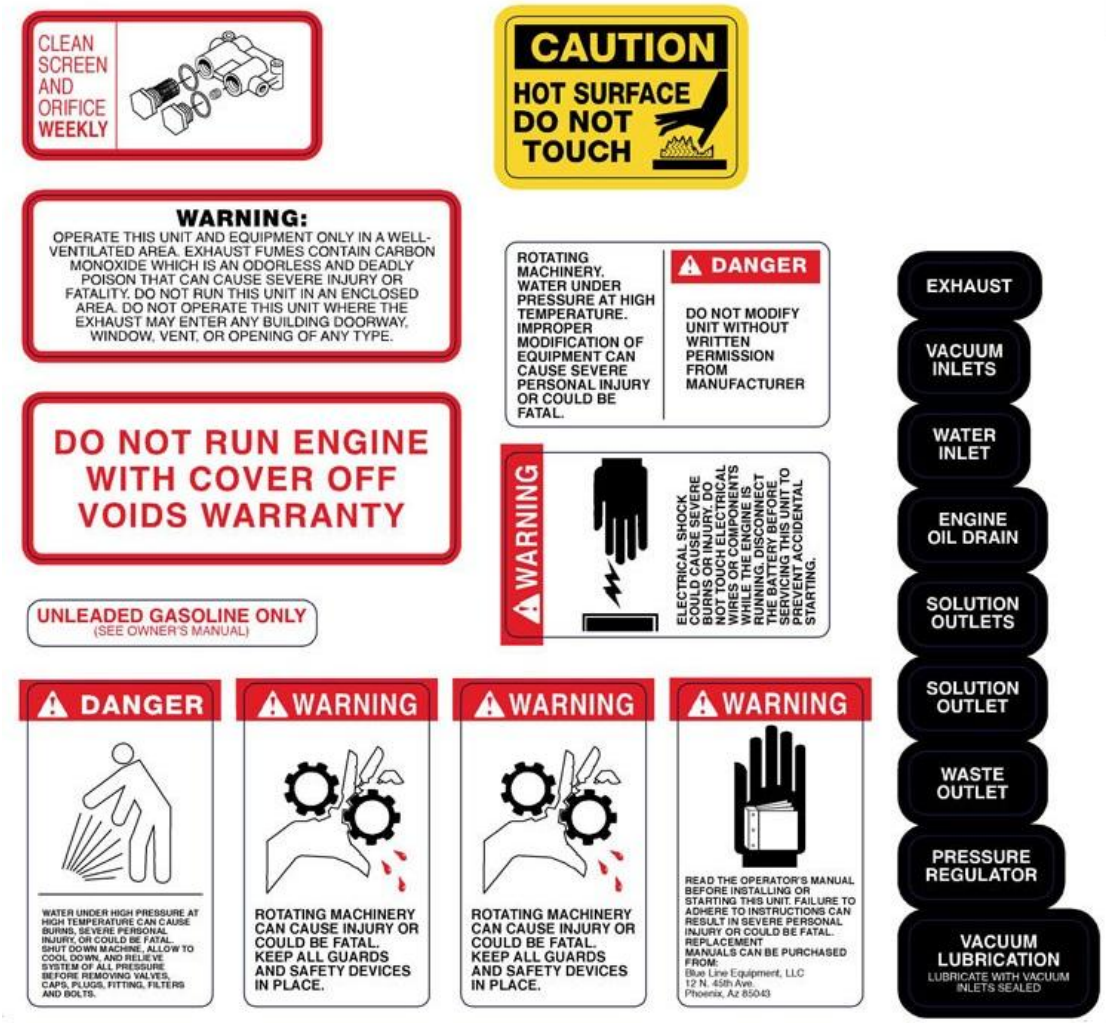

44-000 DECAL SHEET, WARNING & CONTROLS

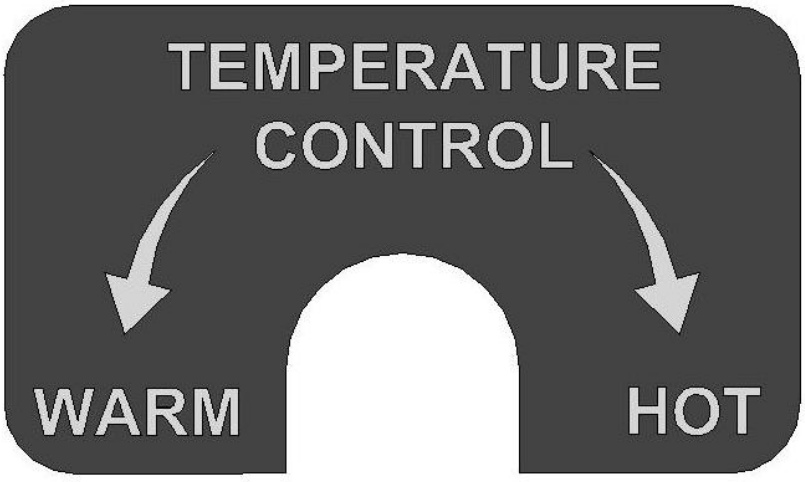

44-024 DECAL, TEMPURATURE CONTROL

44-001 DECAL, HOOD BLUELINE

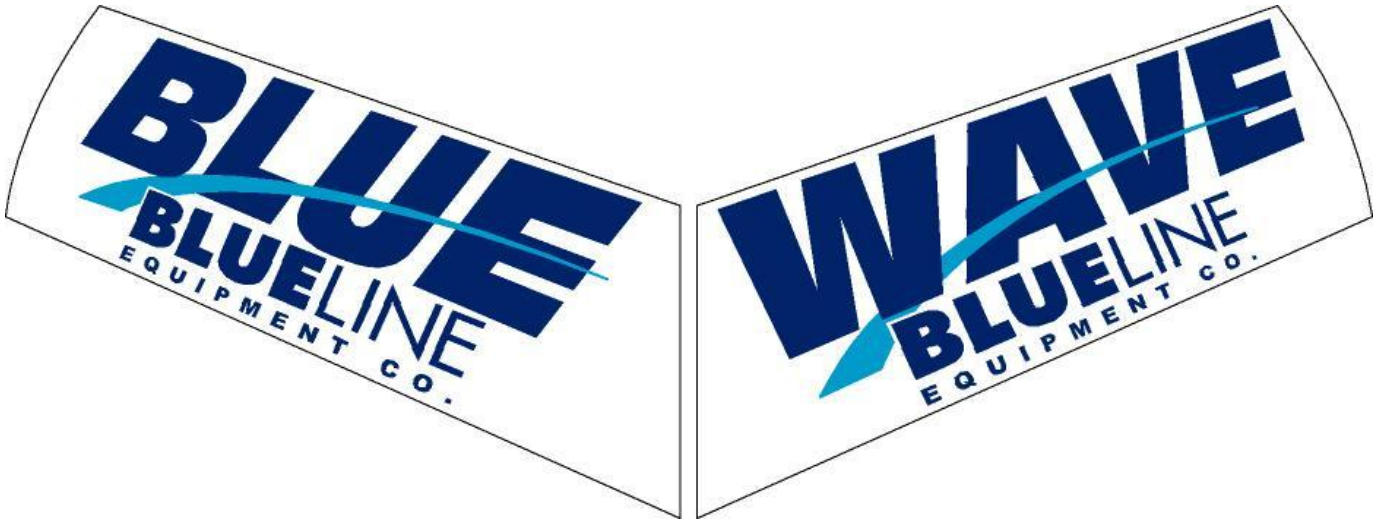

44-023 DECAL, BLUEWAVE GRILL
5-27

ELECTRICAL DIAGRAM

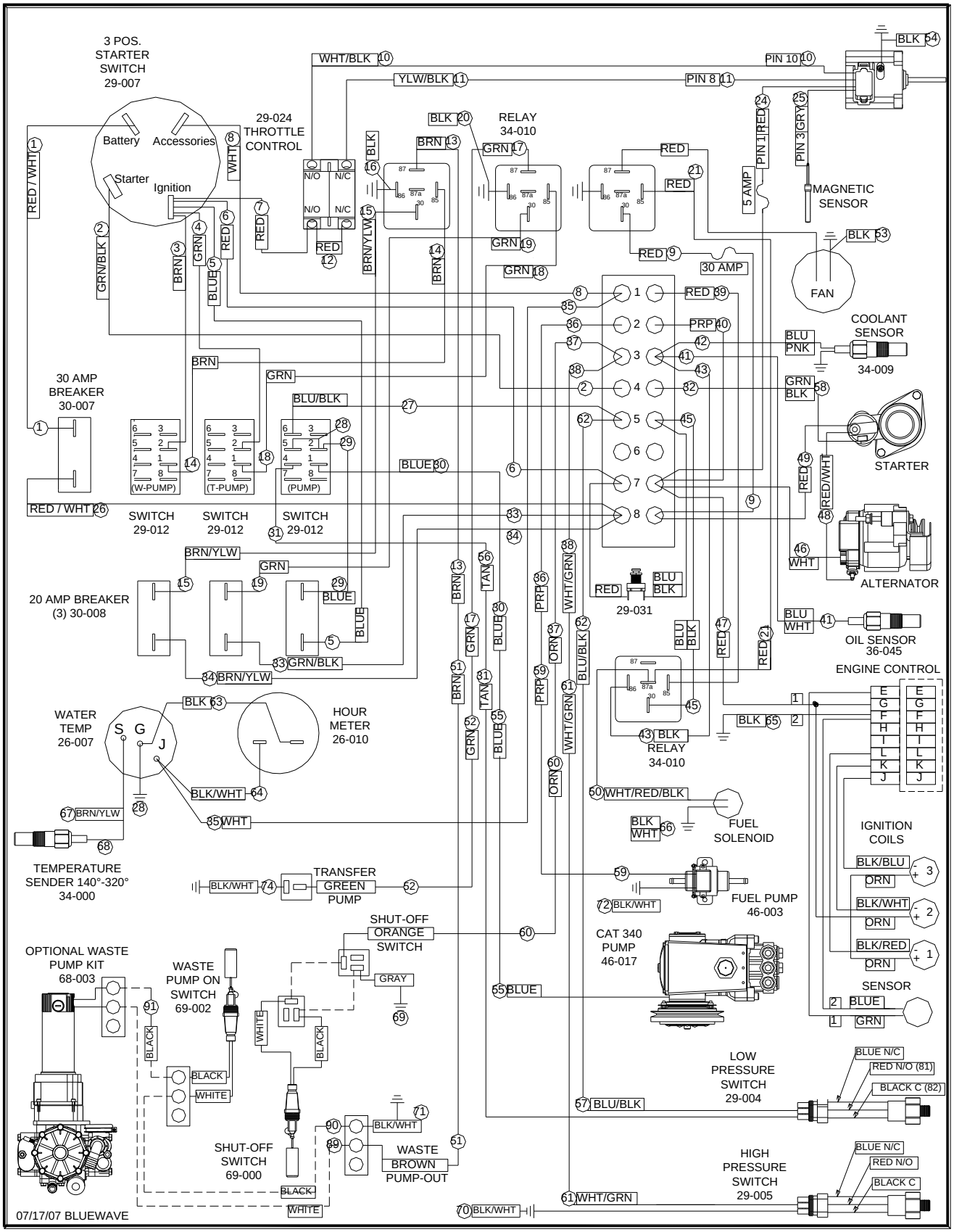

Oil PSI
CarQuest: PS15

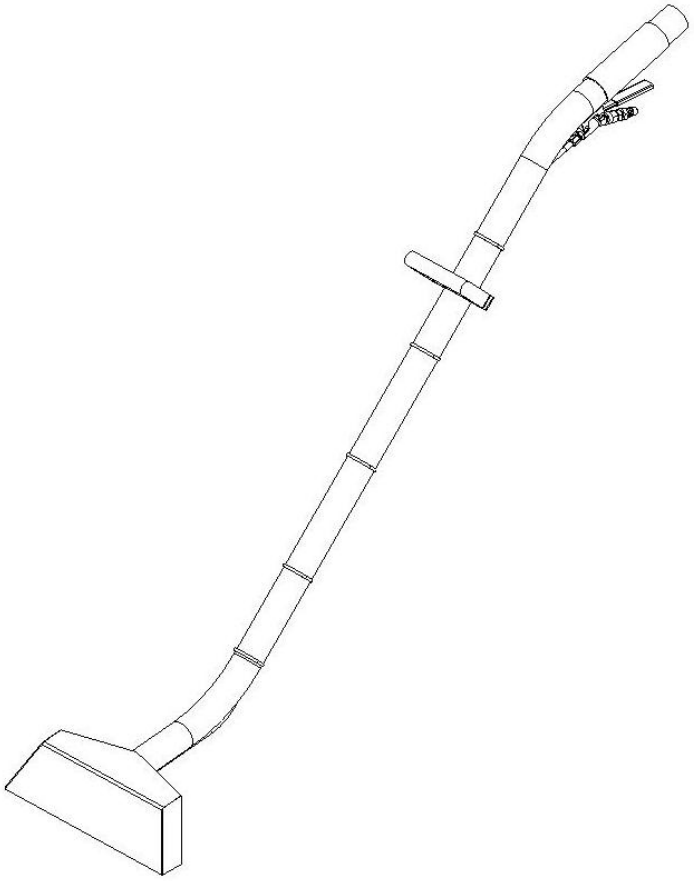

5-31

67-001 WAND, LOW PROFILE 2 IN.

Item No.	Part Number	Qty	Description
1	67-001	1	WAND, LOW PROFILE 2 IN
2	25-000	1	DSC, 1/4M X 1/4FP BR
3	27-013	1	VLV, WAND CMP
4	21-050	1	CONN, 1/4 P X 1/4 T BRASS
5	18-021	1	HOSE, 3/16 X 51 1/4FT X 1/4FT
6	24-000	4	TIP, SPRAY 95015X1/8P SST
	40-010	1	HANDLE, WAND REPLACENT

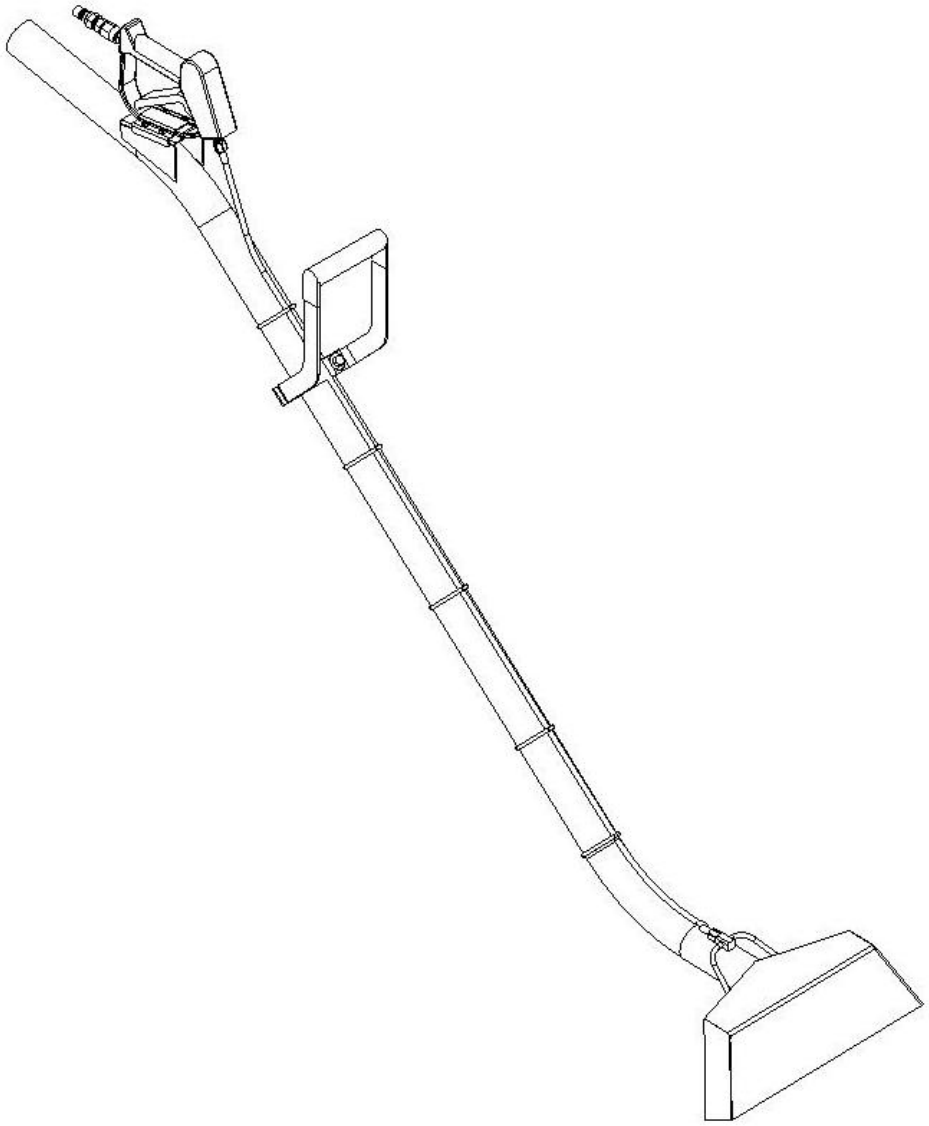

67-003 WAND, ERGONOMIC W-SPRAYER

Item No.	Part Number	Qty	Description
1	67-003	1	WAND,ERGONOMIC W /SPRAYER
2	25-000	1	DSC, 1/4M X 1/4FP BR
3	23-035	1	VLV,SPRAYER HYPRO 3381-0032
4	21-050	1	CONN, 1/4 P X 1/4 T BRASS
5	18-021	1	HOSE, 3/16 X 51 1/4FT X 1/4FT
6	24-000	4	TIP, SPRAY 95015X1/8P SST
7	40-009	1	HANDLE, ERGO WAND COATED

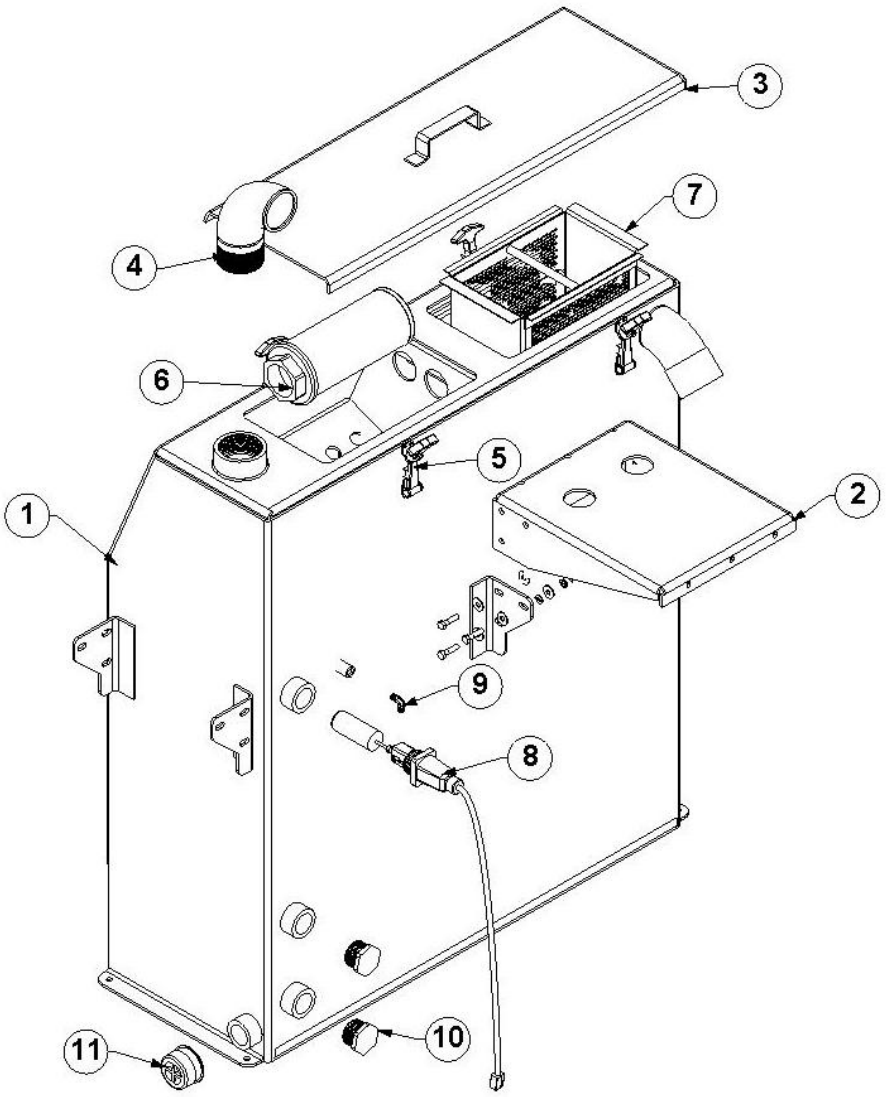

68-052 ASSY, WASTE TANK BLUEWAVE

Item No.	Part Number	Qty	Description
1	61-132	1	ASSY, WASTE TANK BLUEWAVE
2	59-346	1	MNT, WATER BOX BRKT BW
3	61-061	1	ASSY, WST TANK LID CHAMP
4	61-027	1	ELBOW, WASTE TANK INLET
5	40-003	4	LATCH, PRE-FILTER BOX
6	20-021	1	STRAINER, FILTER BLUEWAVE
7	61-002	1	BASKET, STRAINER WASTE TANK
8	69-000	1	WIRING , LEVEL SENSOR SHUTOFF
9	21-051	1	ELL, 1/4 P X 1/4 T 45 DEG BRASS
10	21-097	2	PLUG, 1-1/4 IN PVC
11	19-009	1	CAP, WASTE TANK INLET
	11-005	6	NUT, 5/16-18 ZINC
	12-017	12	WASHER, FLAT 5/16 SAE
	12-016	6	LKWSR, 5/16 ZINC
	10-023	6	SCREW, MACH 5/16-18 x 1-1/4 SS HXHD

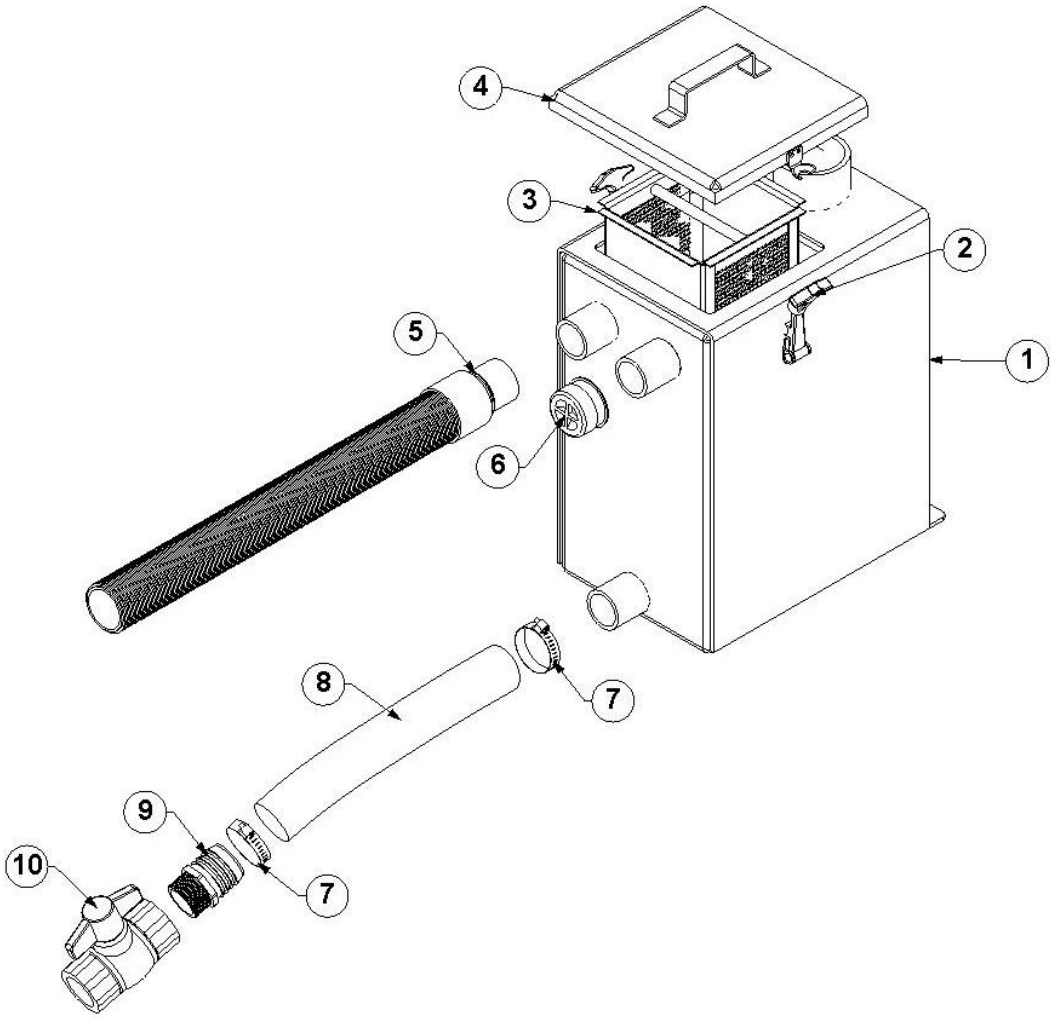

5-30

68-020 ASSY, PRE-FILTER BOX WASTE TANK V2

Item No.	Part Number	Qty	Description
1	61-012V2	1	ASSY, PRE-FILTER BOX V2
2	40-003	2	LATCH, PRE-FILTER BOX
3	61-039	1	ASSY, STRAINER BSKT PRE-FLTR BOX V2
4	61-020V2	1	ASSY, LID PRE-FILTER BOX V2
5	18-003	1	HOSE, VAC 2 IN. FLEX SUPER TM
6	19-009	1	CAP, WASTE TANK INLET
7	14-010	2	CLAMP, HOSE #32
8	17-421	1	HOSE, INT. VACUUM 2 IN X 6 FT
9	21-094	1	FTTG, 1-1/2 P X 2 H DRAIN
10	23-022	1	VLV, BALL 1-1/2 FP PVC DUMP

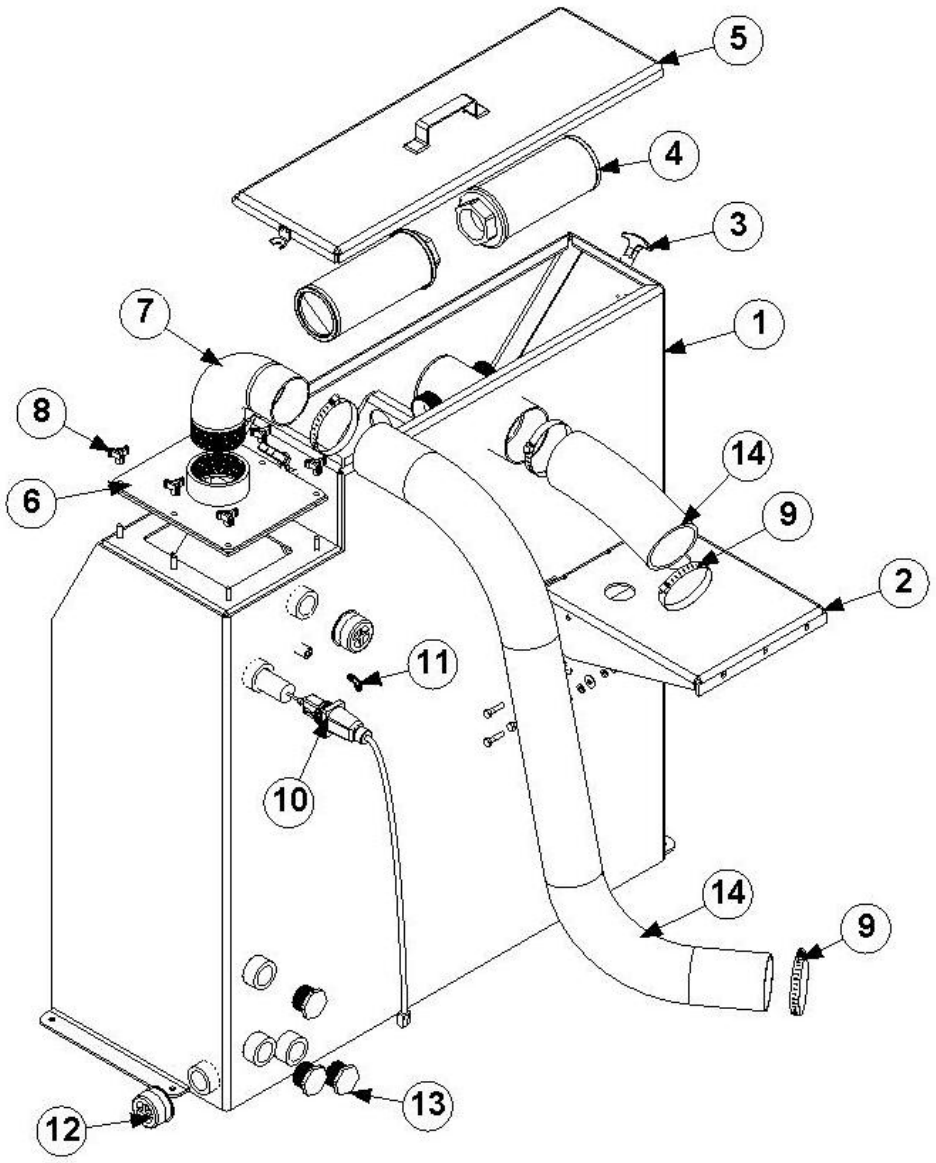

5-32

68-075 ASSY, BLUEWAVE 100 GAL WST TNK

Item No.	Part Number	Qty	Description
1	61-171	1	ASSY,WST TNK100 GAL BLUEWAVE
2	59-346	1	MNT, WATER BOX BRKT BW
3	40-003	2	LATCH, PRE-FILTER BOX
4	20-021	2	STRAINER, FILTER BLUEWAVE
5	61-037	1	ASSY, LID WST TNK REAR MT
6	61-024	1	PANEL, INLET ACCESS WASTE TANK
7	61-027	1	ELBOW, WASTE TANK INLET
8	10-031	6	SCREW, THUMB 5/16-18 X 3/4
9	14-008	4	#072 Hose Clamp (76/127mm)
10	69-000	1	WIRING , LEVEL SENSOR SHUTOFF
11	21-051	1	ELL, 1/4 P X 1/4 T 45 DEG BRASS
12	19-009	2	CAP, WASTE TANK INLET
13	21-097	3	PLUG, 1-1/4 IN PVC
14	16-014	72	HOSE, INT VAC 3-1/2 IN 50 FT BULK

10. ACCESSORIES

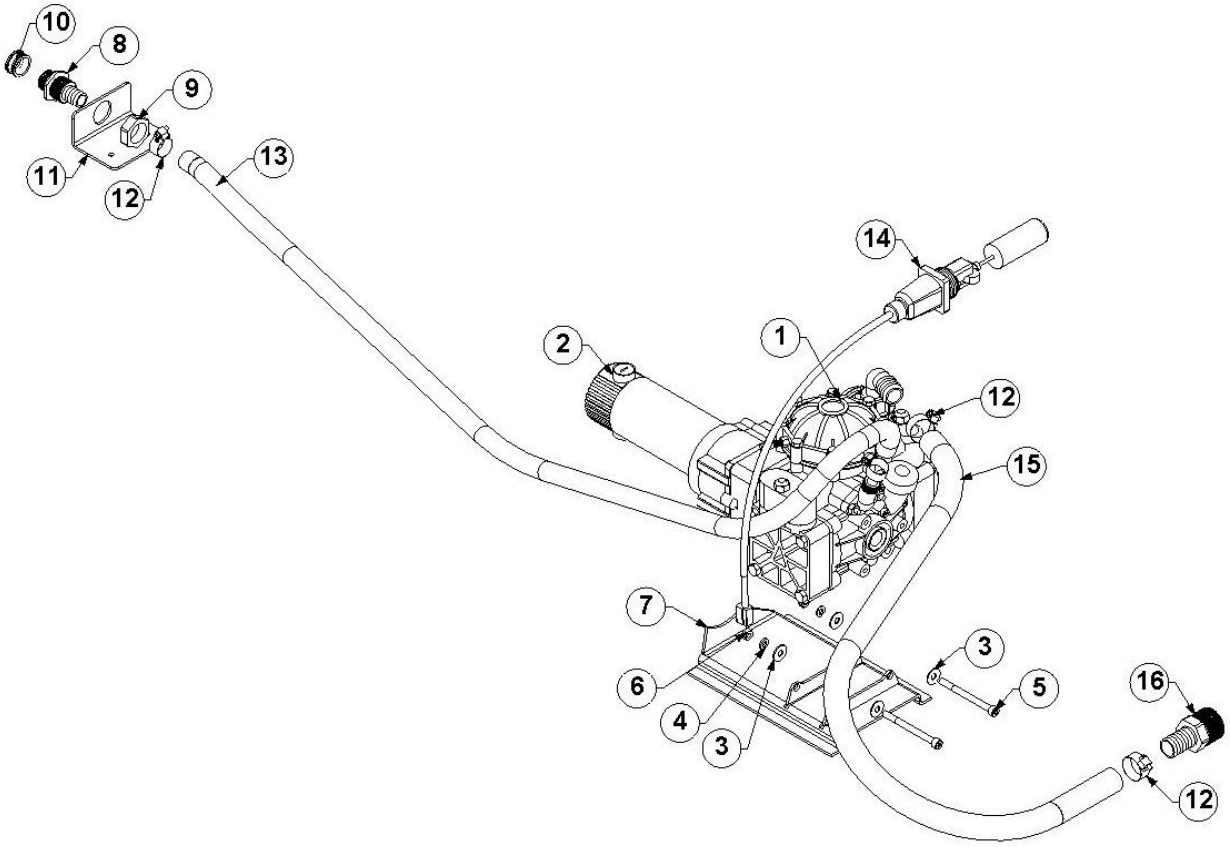

5-34

68-003 KIT, WASTE PUMP EXTERNAL

Item No.	Part Number	Qty	Description
1	46-016	1	PUMP, DIAPHRAGM, PUMP OUT
2	45-008	1	MOTOR, GEAR BISON PUMPOUT
3	12-017	4	WASHER, FLAT 5/16 SAE
4	12-016	2	LKWSR, 5/16 ZINC
5	10-040	2	SCREW, MACH 5/16-18 X 3-1/2 SOCHD
6	11-005	2	NUT, 5/16-18 ZINC
7	61-003	1	MOUNT, EXTERNAL PUMPOUT
8	66-022	1	ADAPTOR, HOSE WASTE PUMP
9	66-023	1	NUT, ADPTR. HOSE WASTE PUMP
10	21-071	1	CAP, GARDEN HOSE 3/4 BRASS
11	58-006	1	BRKT, HOSE CONN WASTE PUMP
12	14-006	4	CLAMP, HOSE #20
13	16-004	72”	HOSE, WTR. 3/4 IN HRZ. 500FT BULK
14	69-000	1	WIRING , LEVEL SENSOR SHUTOFF
15	16-018	24”	HOSE, WTR. 1 IN HRZ. 100FT BULK
16	21-036	1	FTTG, BRB 1-1/4 P X 1 IN. BARB

1992 TO 2002 FORD FUEL LINE INSTALLATION

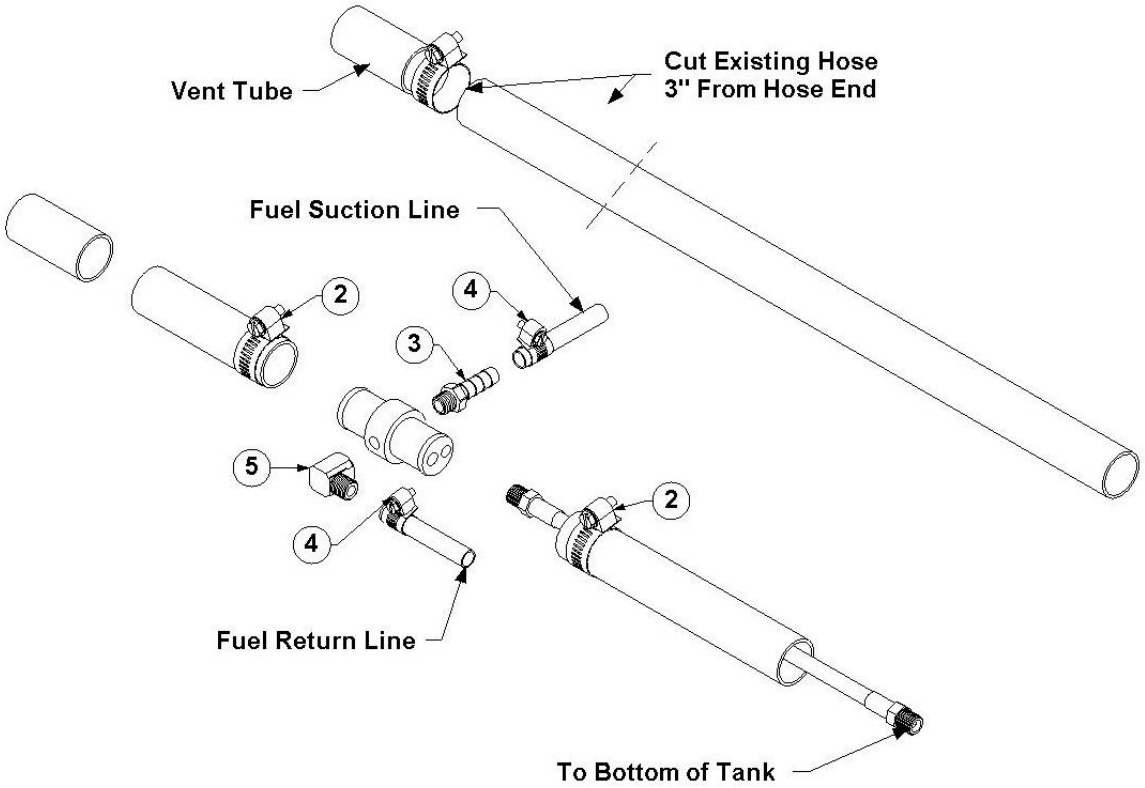

5-35

69-005FI KIT, FUEL HOOKUP FORD FI

Item No.	Part Number	Qty	Description
1	66-031	1	ADAPTOR, FUEL FILLER NECK FORD
2	14-000	2	CLAMP, HOSE #12
3	18-028	1	HOSE, 3/16 X 25 1/8P X 1/8P NO CVR
4	21-086	2	FTTG, BULKHEAD 1/4 IN. BRASS
5	21-006	4	FTTG, BRB 1/4PX5//16H BR
6	21-039	2	ELL, 1/4 IN LG STREET BRASS
7	14-011	6	CLAMP, HOSE FUEL #6
8	21-038	1	ELL, STREET 1/8 IN. BRASS
9	21-007	2	FTTG, BRB 1/8 P X 5/16 H BR

CHEVY AND GMC FULL SIZE VAN FUEL LINE INSTALLATION

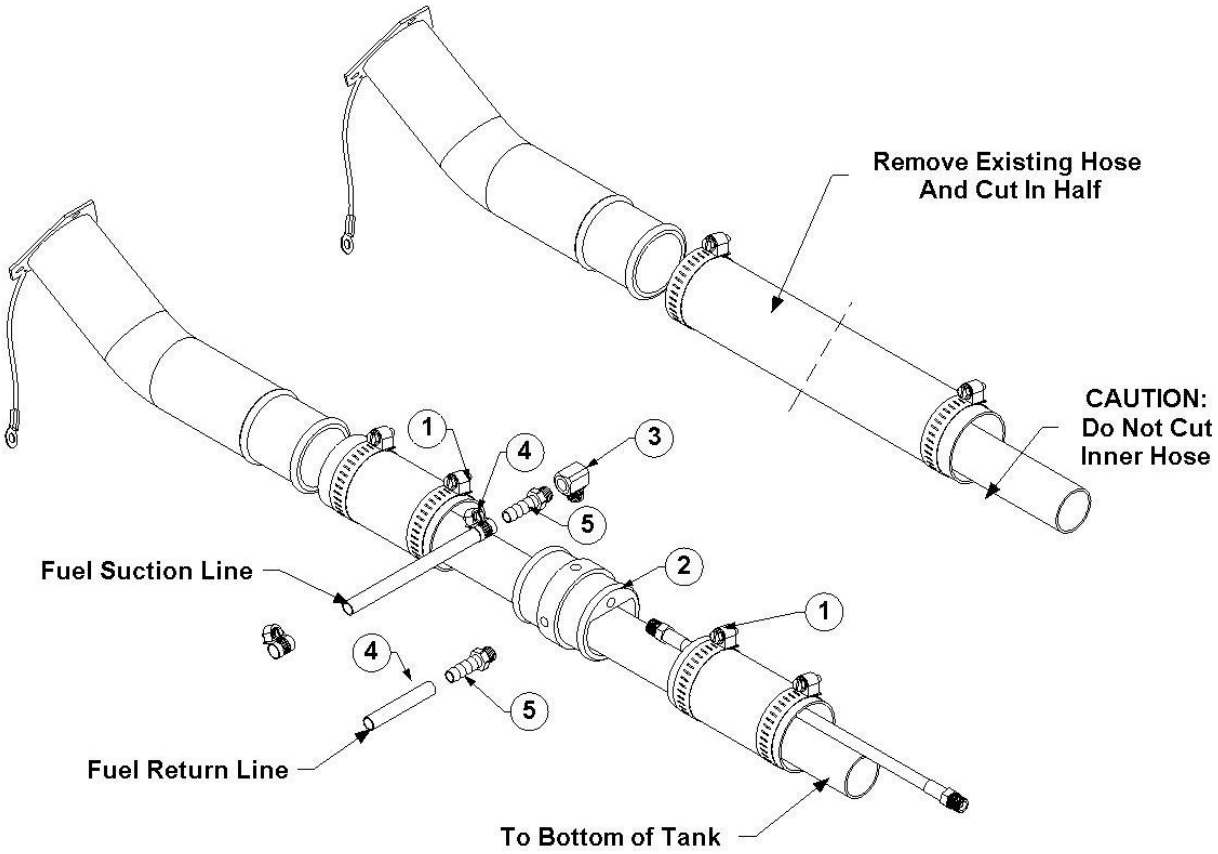

5-36

69-003FI KIT, FUEL HOOKUP 97 & 2002 FI

Item No.	Part Number	Qty	Description
1	14-010	2	CLAMP, HOSE #32
2	66-030	1	ADAPTOR, FUEL FILLER NECK CHEVY
3	21-116	1	ELL, 1/8FP 90 DEG BRONZE
4	14-011	6	CLAMP, HOSE FUEL #6
5	21-007	2	FTTG,BRB 1/8 PX 5/16 H BR
6	18-027	2	HOSE, 3/16 X 5 1/8P X 1/8P NO CVR
7	21-006	4	FTTG, BRB 1/4P X 5/16 H BR
8	21-039	2	ELL, 1/4 IN LG STREET BRASS
9	21-038	1	ELL, STREET 1/8 IN. BRASS
10	21-086	2	FTTG, BULKHEAD 1/4 IN. BRASS

2003 CHEVY AND GMC FULL SIZE VAN FUEL LINE INSTALLATION

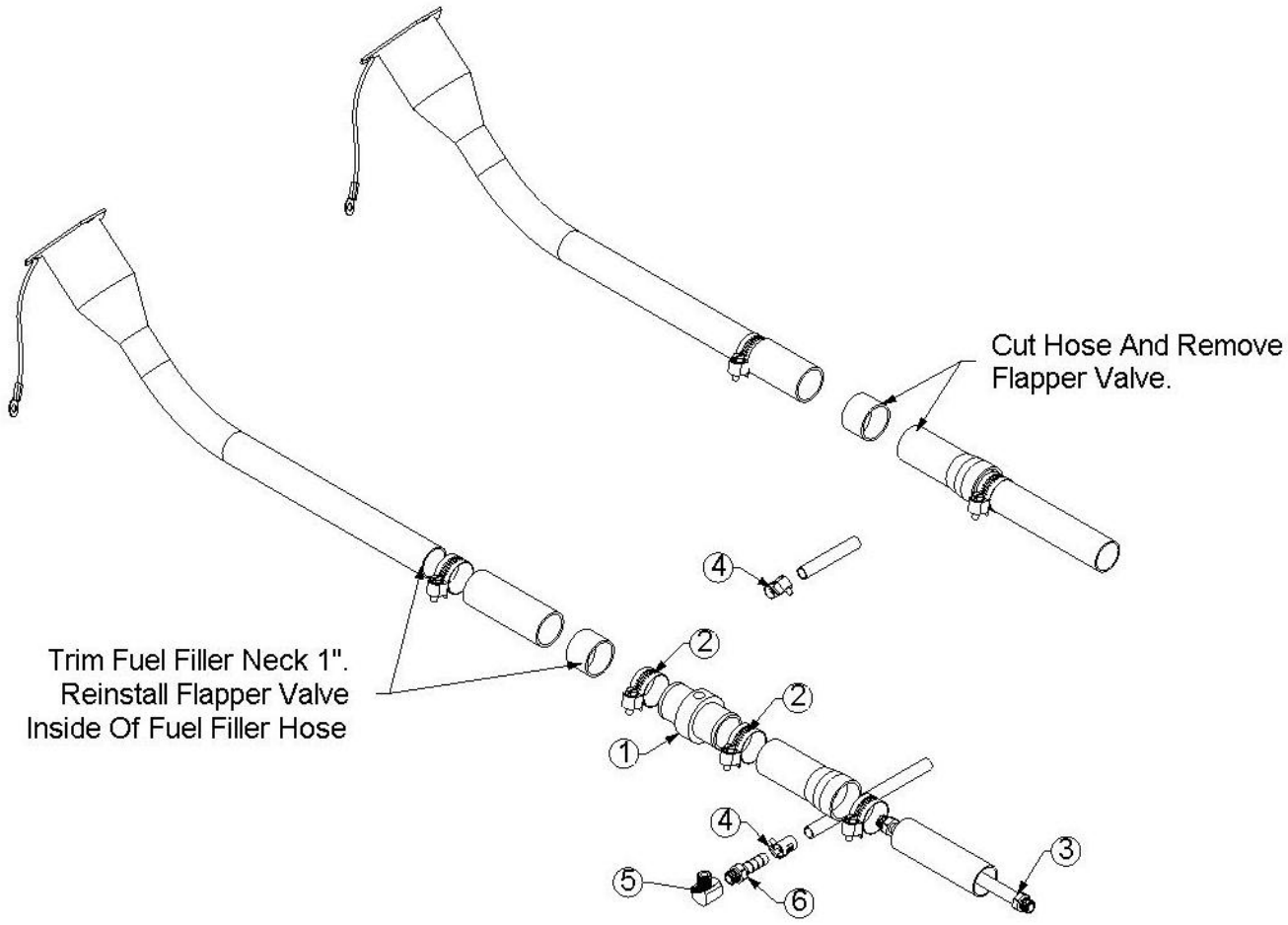

5-37

69-018FI KIT, FUEL HOOKUP 2003 CHEVY FI

Item No.	Part Number	Qty	Description
1	66-034	1	ADAPTOR, FUEL FLR CHVY 2003
2	14-006	2	CLAMP, HOSE #20
3	18-028	1	HOSE, 3/16 X 25 1/8P X 1/8P NO CVR
4	14-011	6	CLAMP, HOSE FUEL #6
5	21-038	1	ELL, STREET 1/8 IN. BRASS
6	21-007	2	FTTG,BRB 1/8 PX 5/16 H BR
7	21-039	2	ELL, 1/4 IN LG STREET BRASS
8	21-006	4	FTTG, BRB 1/4PX5//16H BR
9	21-086	2	FTTG, BULKHEAD 1/4 IN. BRASS

1997-2002 DODGE FULL SIZE VAN FUEL LINE INSTALLATION

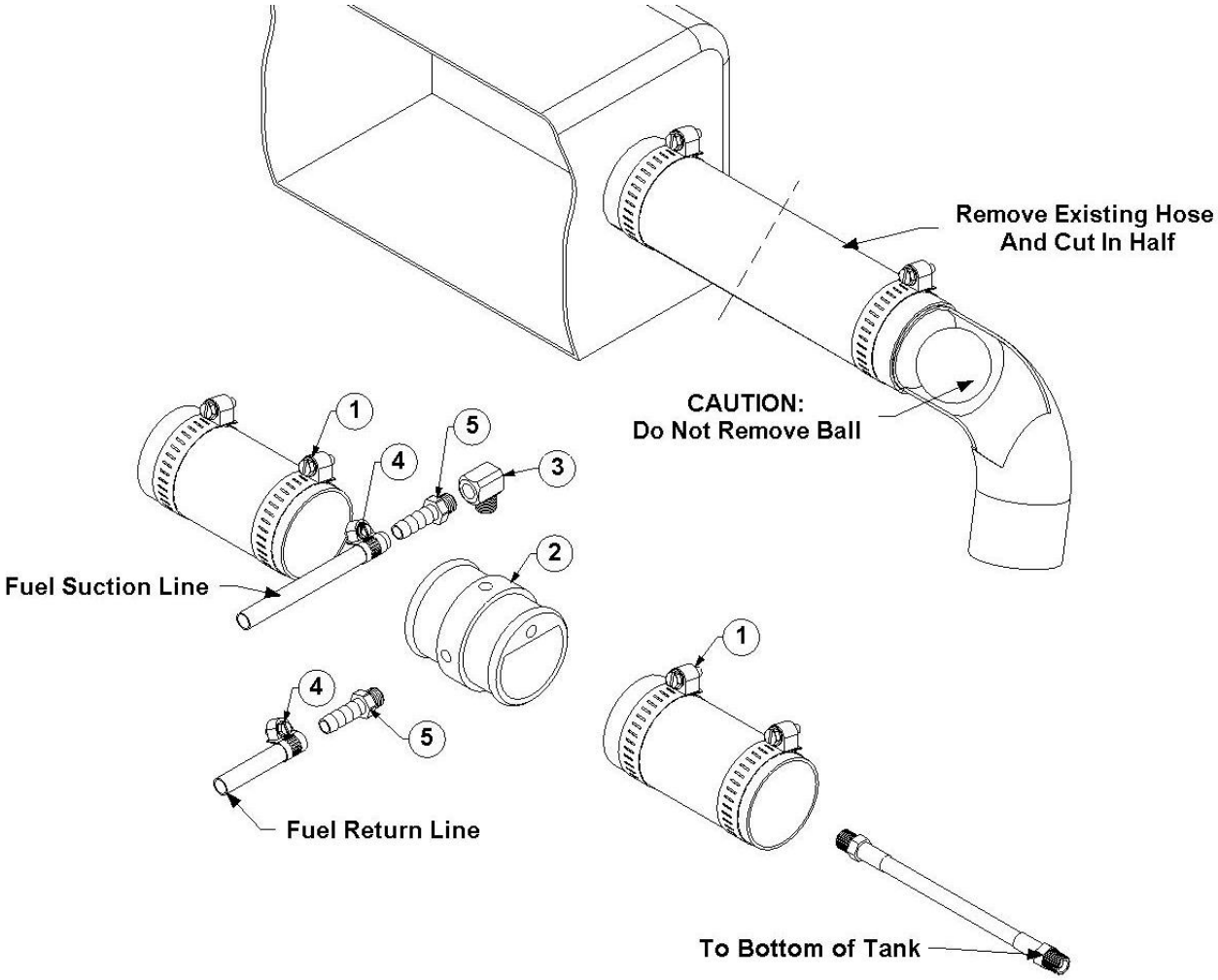

5-38

69-004FI KIT, FUEL HOOKUP CHEVY/DODGE FI

Item No.	Part Number	Qty	Description
1	14-010	2	#32 Hose Clamp (40/63mm)
2	66-030	1	ADAPTOR, FUEL FILLER NECK
3	21-038	1	ELL, STREET 1/8 IN. BRASS
4	14-011	6	CLAMP, HOSE FUEL #6
5	21-007	2	FTTG,BRB 1/8 PX 5/16 H BR
6	18-028	1	HOSE, 3/16 X 25 1/8P X 1/8P NO CVR
7	21-086	2	FTTG, BULKHEAD 1/4 IN. BRASS
8	21-006	4	1/4 M NPT x 5/16 Hose Barb
9	21-039	2	ELL, 1/4 IN LG STREET BRASS

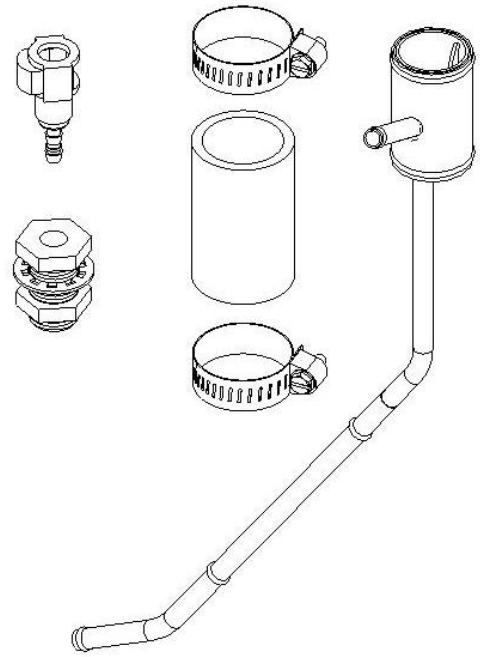

69-032 KIT, 2004 TF ADAPTOR CHEVY

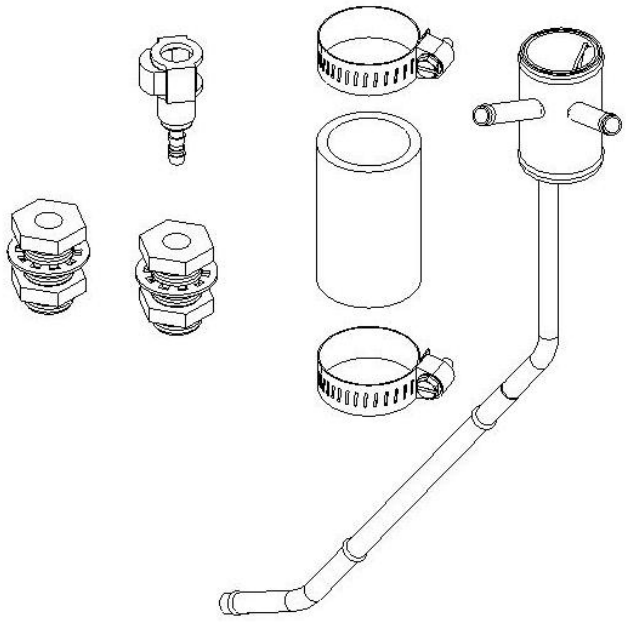

69-032FI KIT, 2004 TF ADAPTOR CHEVY

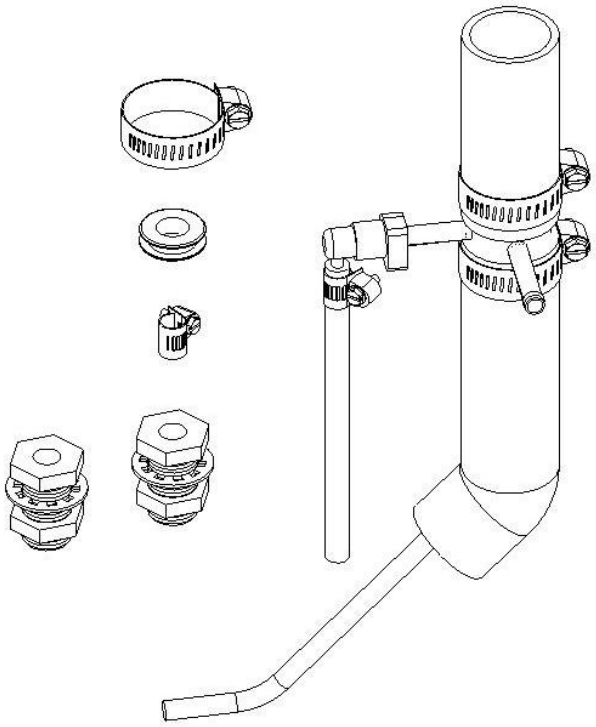

69-047 ADAPTOR, 2004 FUEL FORD

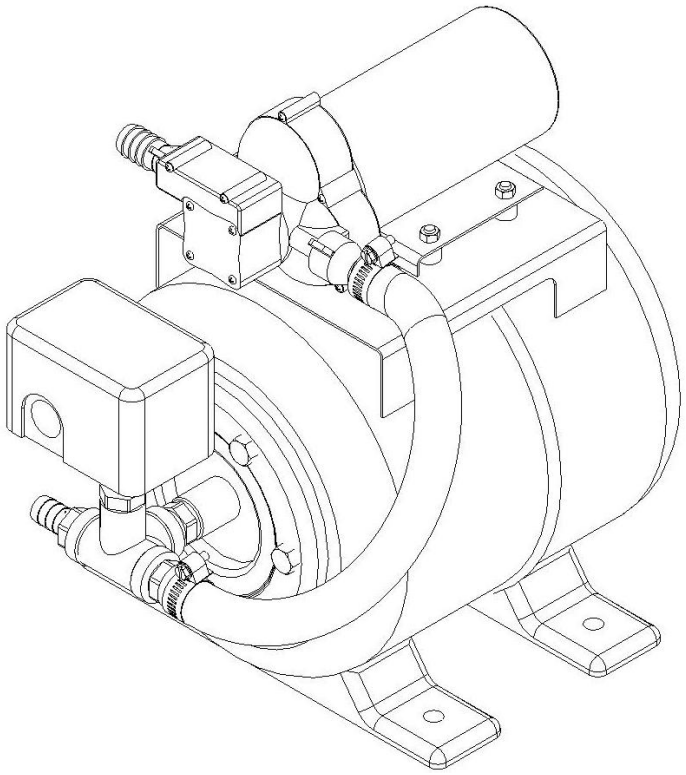

5-39

68-002 KIT, DEMAND PUMP W/PLUMBING SS

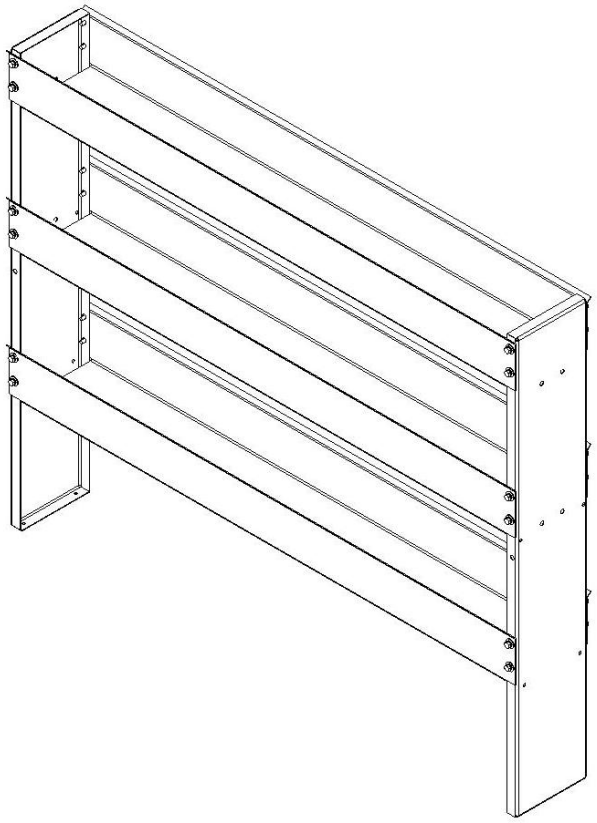

5-40

68-013 ASSY, VAN STORAGE UNIT SS

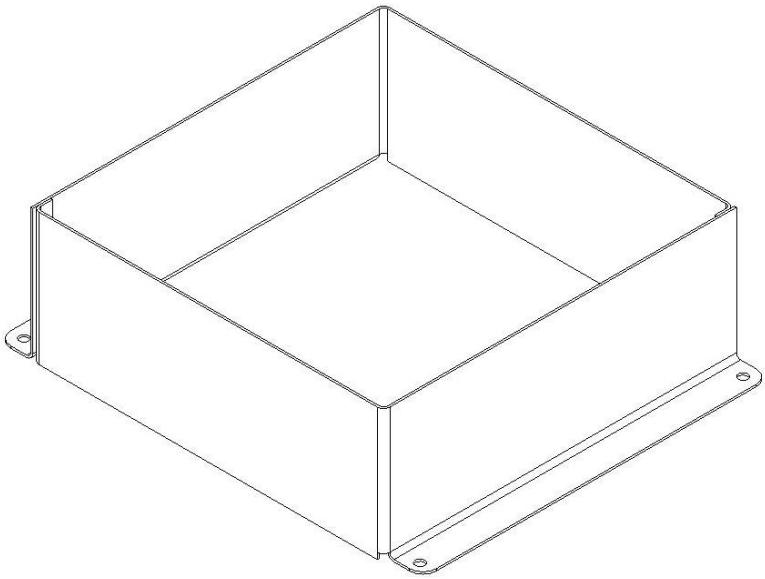

5-41

68-014 ASSY, SINGLE 5 GAL JUG HOLDER

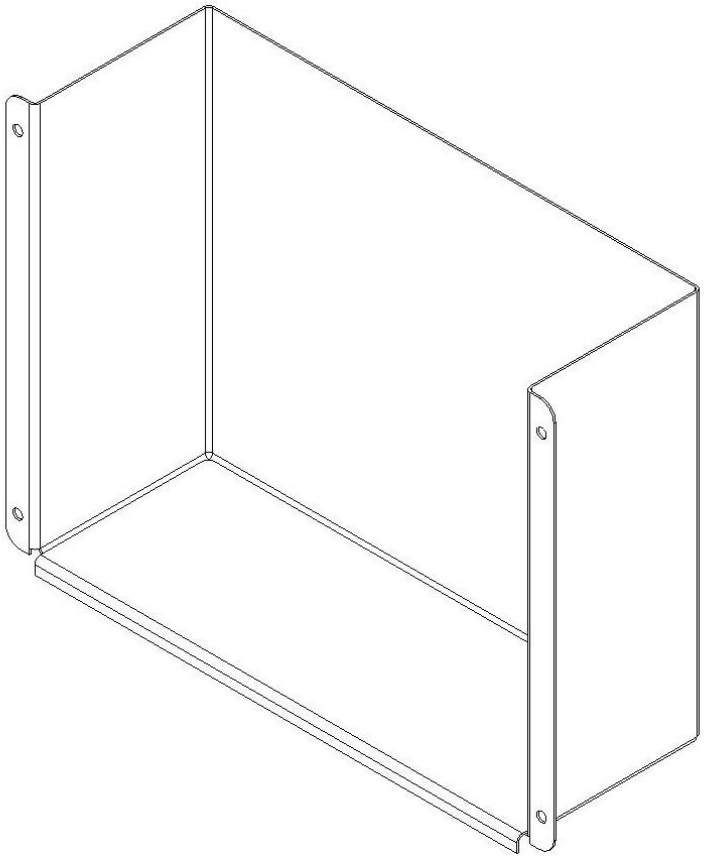

5-42

68-015 ASSY, FURN BLOCK HOLDER SS

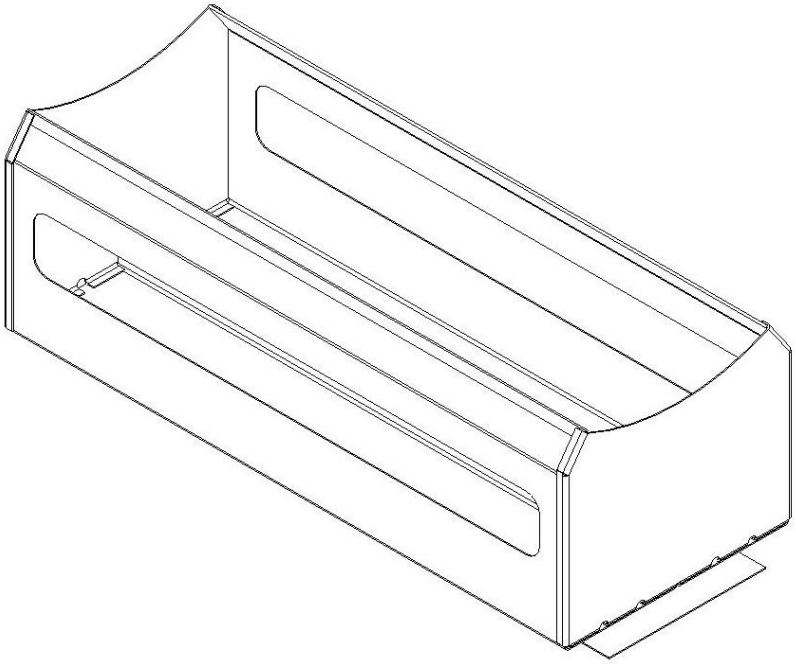

5-43

68-016 RACK, DOUBLE CHEMICAL

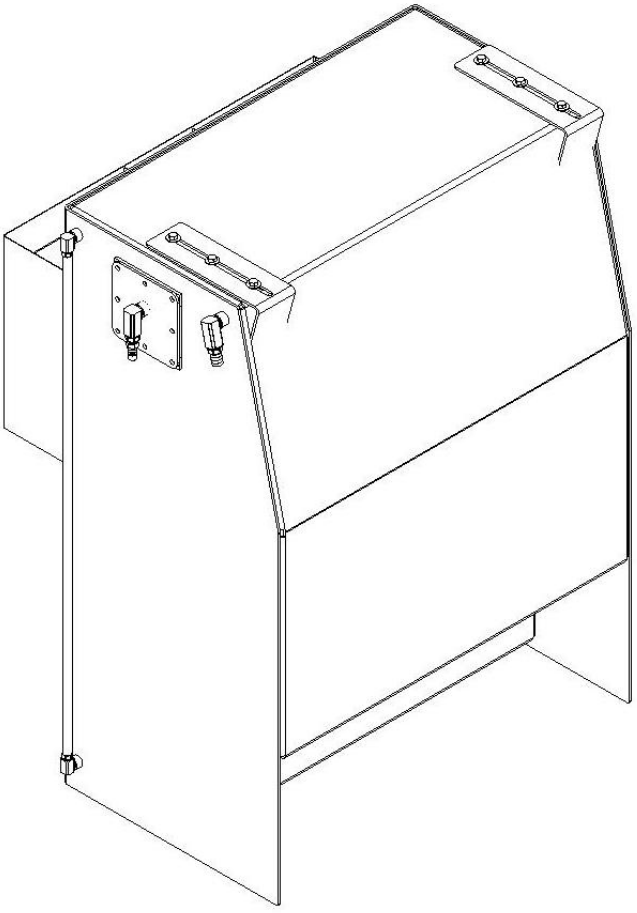

5-44

68-017 ASSY, FIN 120 GAL WTR TNK

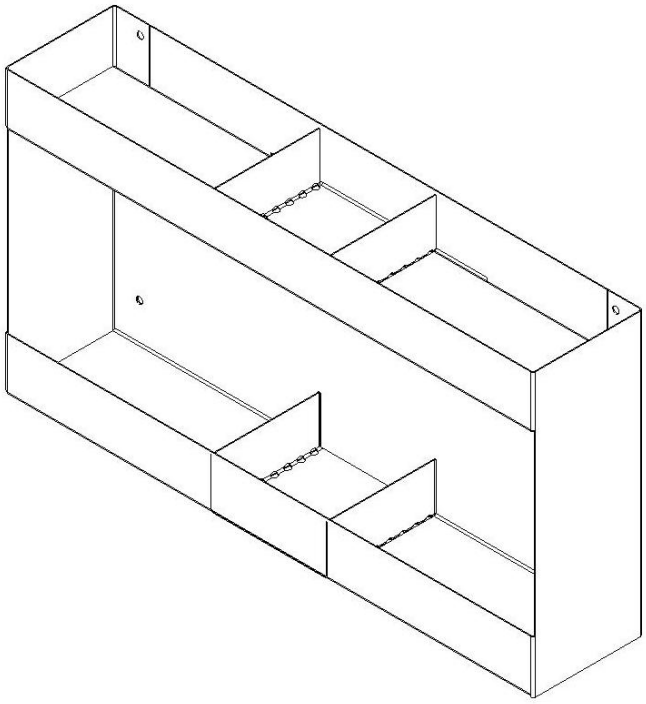

5-45

68-018 ASSY, 10 GAL CHEM RACK S.S.

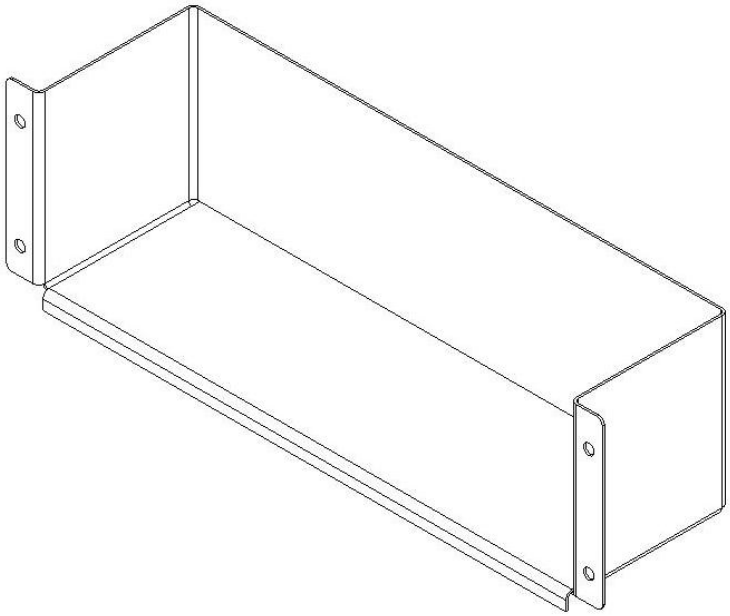

5-46

68-019 SPRAY BOTTLE HOLDER SS

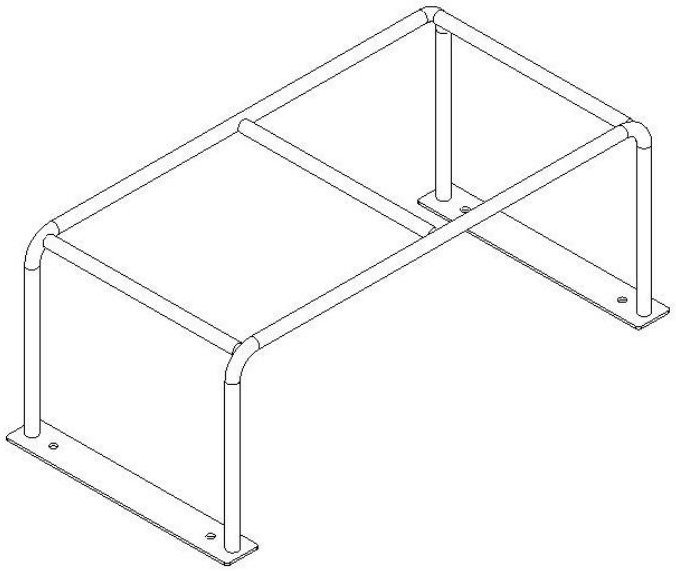

5-47

68-022 ASSY, DBL PMP UP SPRAY RK, SS

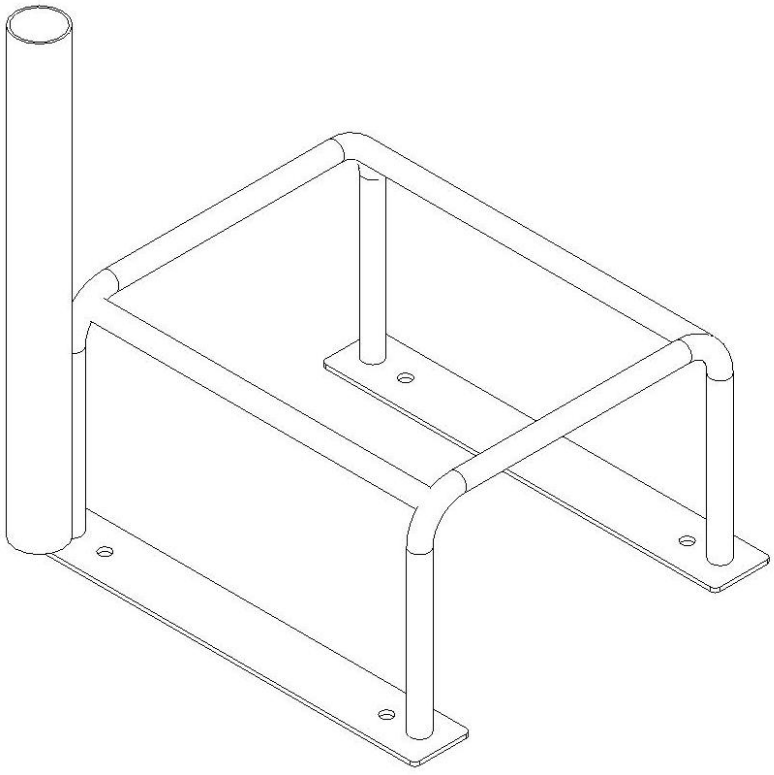

5-48

68-024 ASSY, SNG PMP UP SPRAY RK, SS

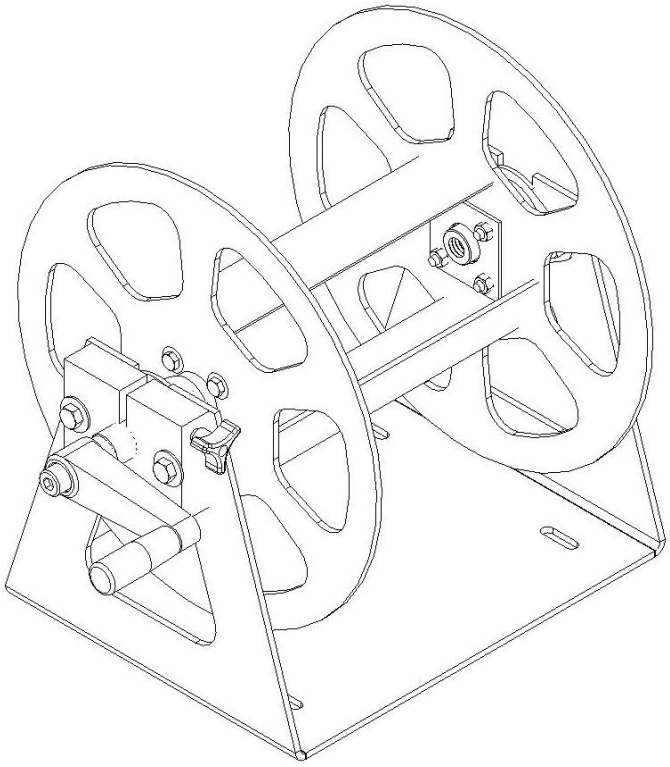

5-49

68-023 ASSY, REEL HP SOLUTION

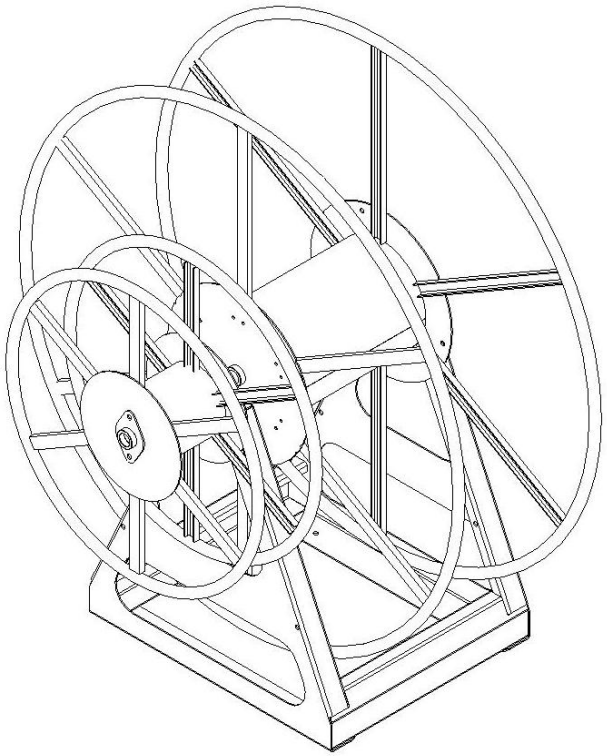

5-50

68-025 ASSY, HOSE REEL HIGH PROFILE

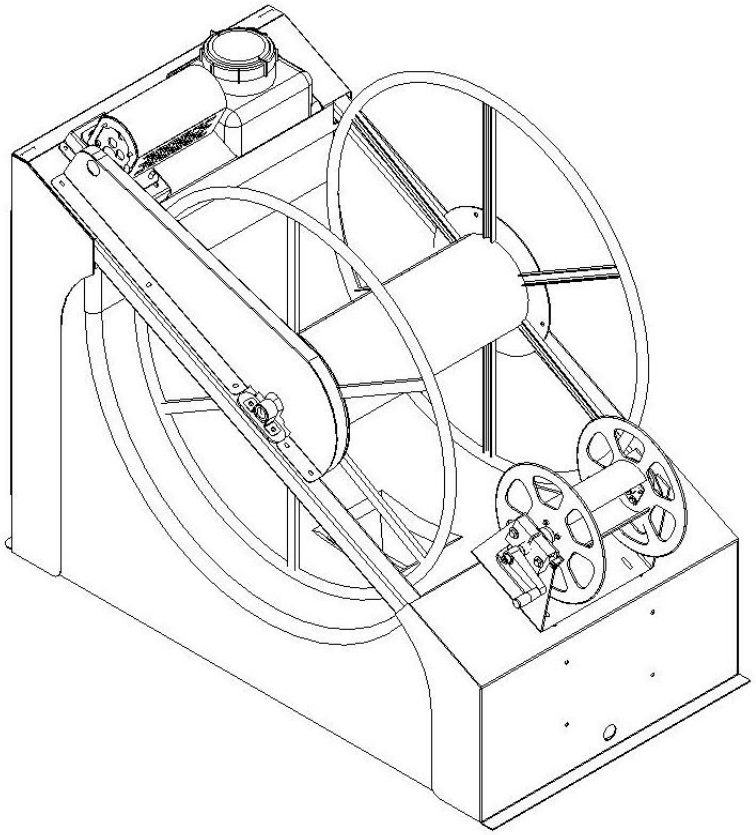

68-032 ASSY, H-REEL MOTORIZED W-H2O TNK

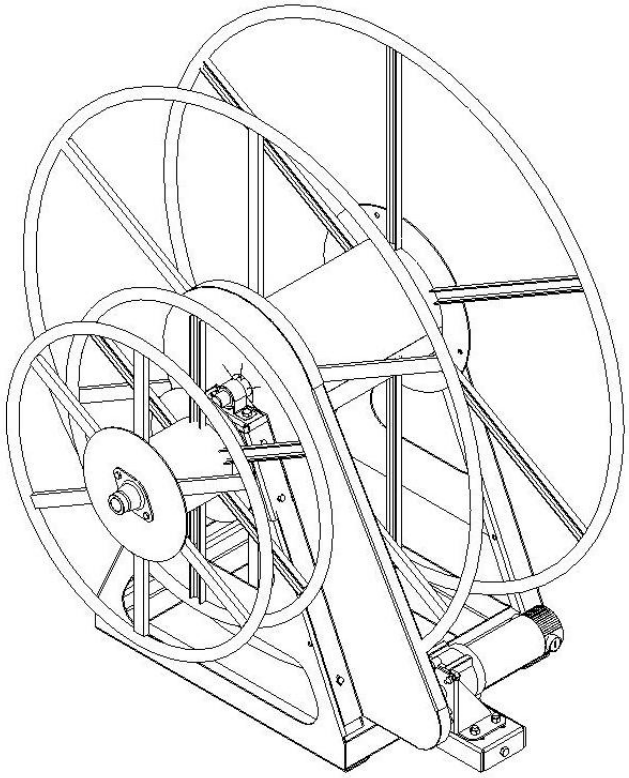

68-033 ASSY, HOSE REEL H. PROFILE W-MTR

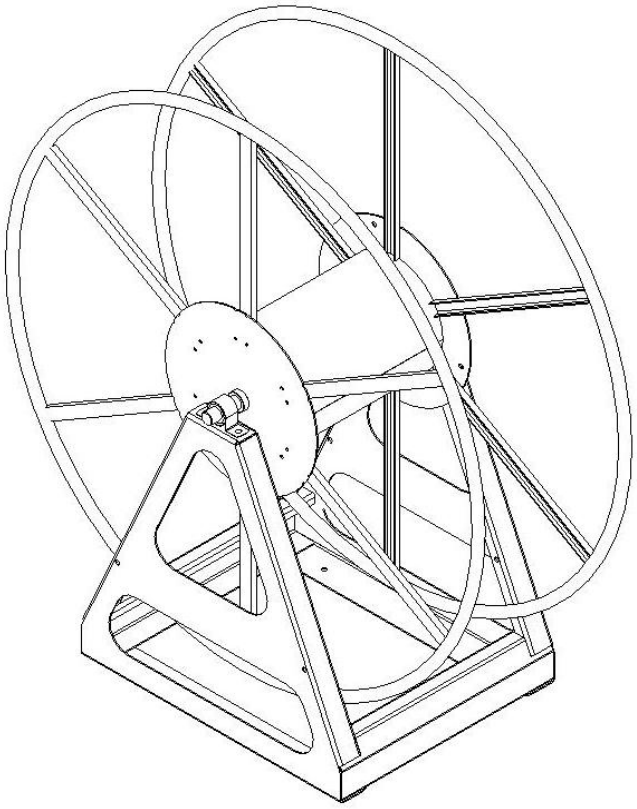

68-037 ASSY, HOSE REEL VAC ONLY

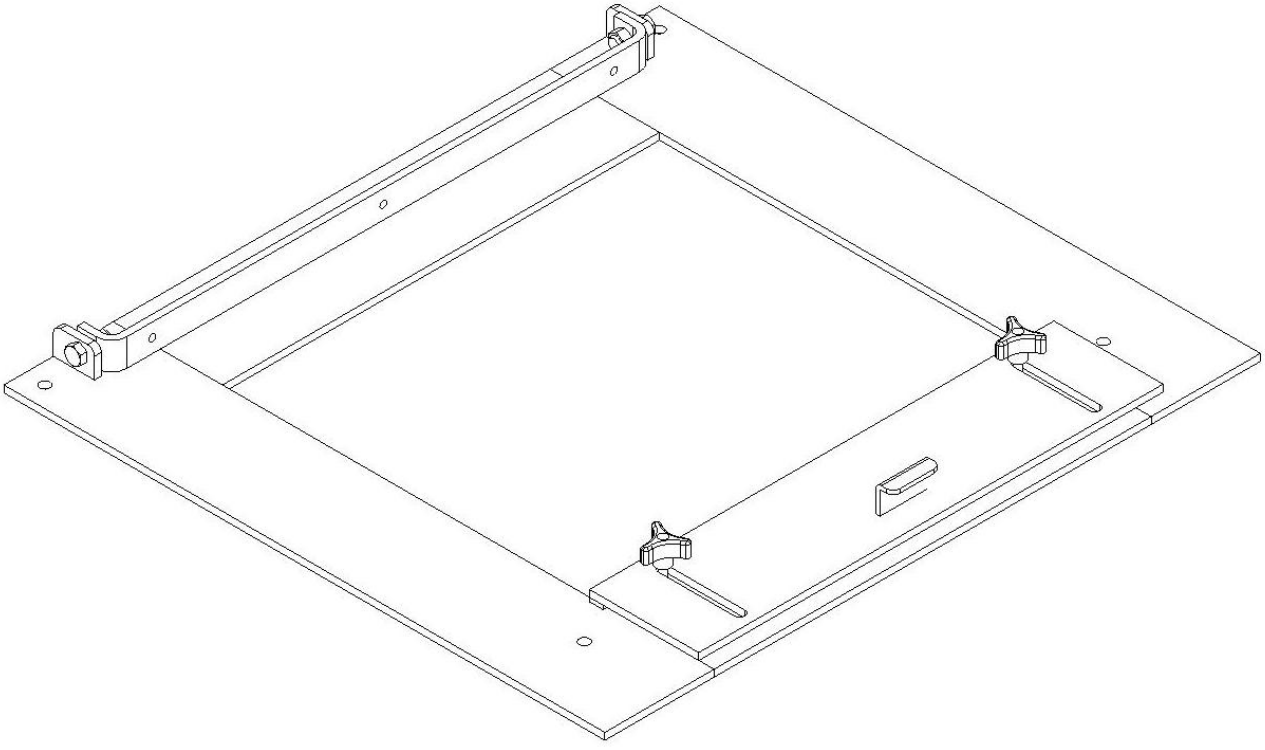

68-043 ASSY, HOSE REEL LAY DOWN KIT

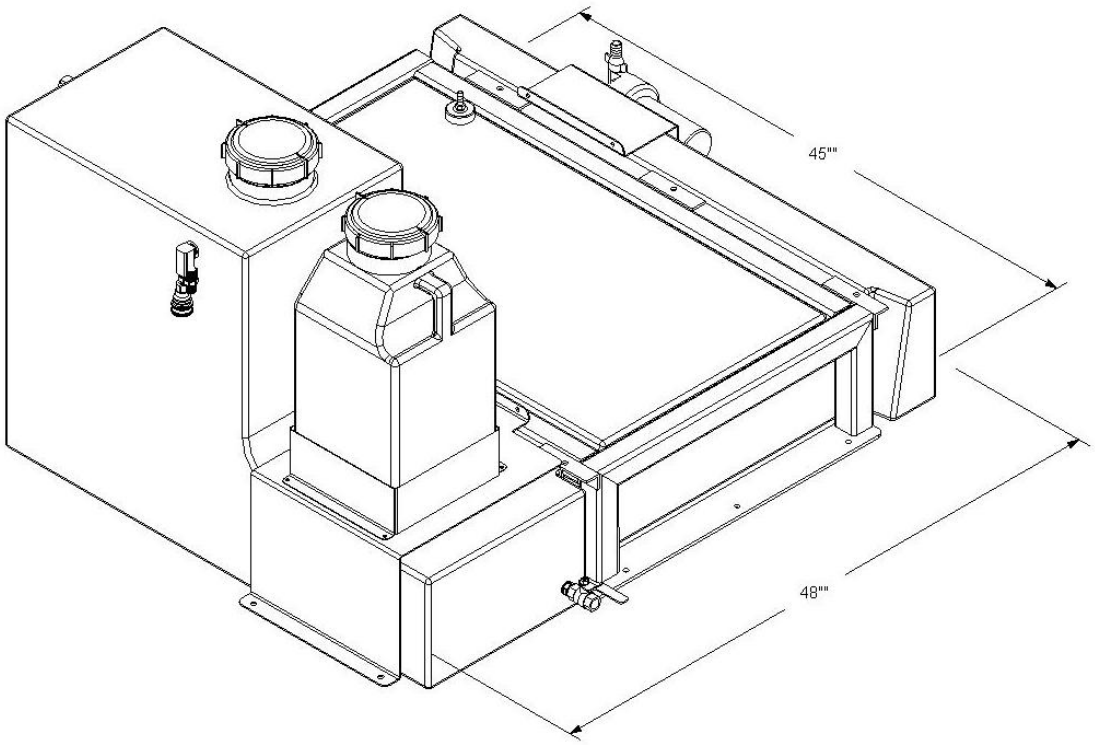

68-059 KIT, SUB MOUNT WATER TANK

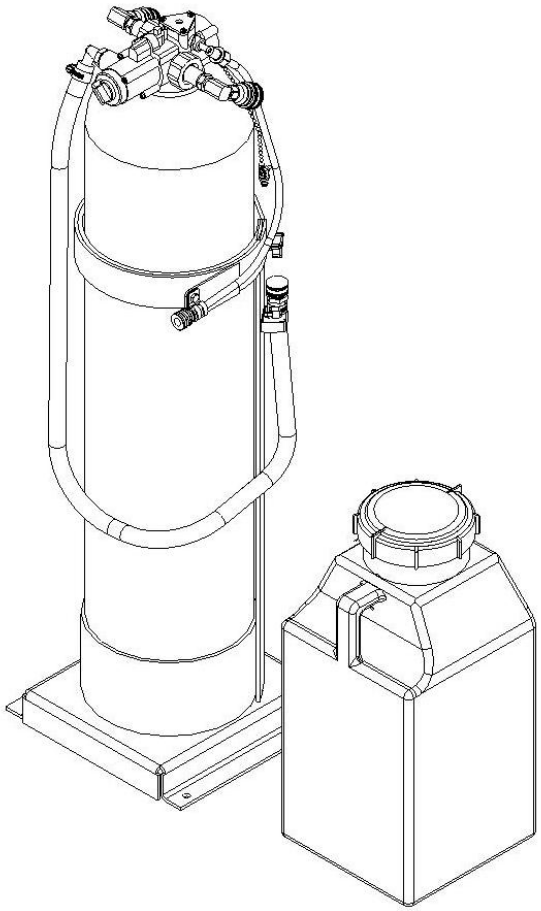

68-045 ASSY, WATER SOFTENER